Tabletop Robot

TTA

Instruction Manual 11th Edition



IAI Corporation

Please Read Before Use

Thank you for purchasing our product.

This Instruction Manual describes all necessary information items to operate this product safely such as the operation procedure, structure and maintenance procedure.
Before the operation, read this manual carefully and fully understand it to operate this product safely.

This product is designed assuming that installation to the factory equipment is held by educated operators.
Please contact IAI if purposed for another use.

The enclosed DVD in this product package includes the Instruction Manual for this product.
For the operation of this product, print out the necessary sections in the Instruction Manual or display them using the personal computer.

After reading through this manual, keep this Instruction Manual at hand so that the operator of this product can read it whenever necessary.

[Important]

- This Instruction Manual is original.
- The product cannot be operated in any way unless expressly specified in this Instruction Manual. IAI shall assume no responsibility for the outcome of any operation not specified herein.
- Information contained in this Instruction Manual is subject to change without notice for the purpose of product improvement.
- If you have any question or comment regarding the content of this manual, please contact the IAI sales office near you.
- Using or copying all or part of this Instruction Manual without permission is prohibited.
- The company names, names of products and trademarks of each company shown in the sentences are registered trademarks.

Table of Contents

Safety Guide ····· 1
Caution in Handing ····· 8
International Standards Compliances ····· 9
Name and Function of Each Part ····· 10

Chapter 1 Specifications Check 33
1.1 Product Check 33
1.1.1 Parts 33
1.1.2 Instruction Manuals Related to This Product, which are Contained in the Instruction Manual (DVD). 34
1.1.3 How to Read the Model Plate 34
1.1.4 How to Read the Model 35
1.1.5 Model Codes for Option of Y-axis Mount Position Change 37
1.1.6 Model Code for ZR Axis Front-Back Direction Position Change Option 38
1.2 Mechanical Specifications 39
1.2.1 Speed 39
[1] Work Moving Type Pulse Motor Specifications 39
[2] Work Fixing Type Pulse Motor Specifications 39
[3] Work Moving Type Servo Motor Low Lead Specifications 39
[4] Work Moving Type Servo Motor High Lead specification 39
[5] Work Fixing Type Servo Motor Low Lead Specifications 40
[6] Work Fixing Type Servo Motor High Lead specification 40
1.2.2 Max. Speed, Max. Acceleration Speed and Transportable Mass 41
[1] Work Moving Type Pulse Motor Specifications 41
[2] Work Fixing Type Pulse Motor Specifications 41
[3] Work Moving Type Servo Motor Low Lead Specifications 42
[4] Work Moving Type Servo Motor High Lead Specification 42
[5] Work Fixing Type Servo Motor Low Lead Specifications 43
[6] Work Fixing Type Servo Motor High Lead Specifications 43
1.2.3 Driving System and Position Detector 44
[1] Pulse Motor Standard Specifications 44
[2] Pulse Motor High Resolution Specifications 44
[3] Servo Motor Low Lead Specifications 44
[4] Servo Motor High Lead Specifications 44
1.2.4 Positioning Repeatability, Lost Motion (Note 1) 45
[1] Pulse Motor Standard Specifications 45
[2] Pulse Motor High Resolution Specifications 45
[3] Servo Motor Low Lead Specifications 45
[4] Servo Motor High Lead Specifications 45
1.2.5 Relation between Current Limit Value and Pressing Force 46
[1] Pulse Motor Specifications 46
[2] Servo Motor Specifications 48
1.2.6 Allowable Moment for Actuator 49
[1] Work Moving Type Pulse Motor Specifications 49
[2] Work Fixing Type Pulse Motor Specifications 50
[3] Work Moving Type Servo Motor Specifications 51
[4] Work Fixing Type Servo Motor Specifications 52
1.2.7 Ma Direction Moment Offset Datum Position and the Moment Direction of Each Axis 53
1.2.8 Duty of Continuous Operation 55
1.3 Electrical Specifications 60
1.3.1 Protection Circuit 62
[1] Selection of Circuit Breaker 62
[2] Selection of Leakage Breaker 63

1.3.2 Standard I/O Input and Output Interface....64
1.3.3 Standard I/O Connector Pin Assignment....65
1.3.4 Extension I/O Input and Output Interface....66
1.3.5 Extension I/O Connector Pin Assignment....67
1.3.6 Table for I/O Assignment....68
1.3.7 Specifications for Service Power Supply Output....70
1.4 Options....71
1.4.1 X, Y and Z-Axes Options....71
[1] Home-Position Check Sensor (Model: HS)....71
[2] Reversed-Home Specification (Model: NM)....71
[3] Brake Specification (Model: B)....71
[4] With Cover Specification (dedicated for 4-axis type) (Model: CO)....71
1.4.2 Equipment Options....71
[1] Y Change in Y-Axis Mount Position (H1, H2, F1 and F2)....71
[2] Main-Unit Bracket-Equipped Type (Model: FT4, FT6)....71
[3] Support Added for 2020 Type (Model: AP)....71
[4] Detachable Operation Unit Type (Model: OS)....71
[5] Side Slot Attachment Type (Model: SLT0, SLT)....71
[6] Side Plate to Attach Devices (Model: PTH, PTN)....71
[7] ZR-axis Mounting Position 64.5mm Forward (Model: FZ)....71

Chapter 2 Installation....72
2.1 Transportation....72
2.2 Installation and Storage • Preservation Environment....72
[1] Installation Environment....72
[2] Storage • Preservation Environment....72
2.3 How to Install....73
2.3.1 Installation Orientation....73
2.3.2 How to Fix Unit....74
[1] Work Moving Type....74
[2] Work Fixing Type....75
2.3.3 Attachment of the Transported Object....76
2.3.4 Loadable Weight on Table....77
2.3.5 How to Attach Supportive Tools....78
2.4 Procedures to Detach Operation Part....79

Chapter 3 Wiring....82
3.1 Wiring Diagram....82
3.2 Power Supply, Emergency Stop Circuit and Enable Circuit....83
3.2.1 Pulse Motor Type....83
[1] Internal Circuit Composition....83
[2] Example for Composition of Emergency Stop and Enable Circuits....85
3.2.2 AC Servo Motor Type....90
[1] Internal Circuit Composition....90
[2] Example for Composition of Emergency Stop and Enable Circuits....92
3.2.3 Safety Circuit Timing Charts for TTA (Pulse Motor, Servo Motor)....97
3.3 IO Circuit....104
3.3.1 Input and Output Ports Assignment Specification....104
3.3.2 I/O Assignment Parameter List....106
3.3.3 Example for Parameter Settings at Delivery....107
3.3.4 Standard I/O....109
[1] When Service Power Supply Switch is ON (Internal Power Source)....109
[2] When Service Power Supply Switch is ON (Internal Power Source)....110
[3] When Service Power Supply Switch is OFF (External Power Source)....111
3.3.5 Extension I/O....112
3.4 Wiring Method....113
3.4.1 Wiring on AC Inlet for Power Supply....113

3.4.2 Wiring for the Teaching Tool 113
[1] RS232C Interface 114
[2] USB Interface 115
3.4.3 Wiring of System I/O 116
3.4.4 Wiring for PIO 117
[1] IO Cable Layout 117
[2] IO Replacement Cable Layout 118
3.4.5 Grounding 119
3.4.6 Wiring for SIO Module Communication Cable 120
[1] SIO Module 485 Communication Cable (one end with bare cut without connectors with no terminal finishing) 120
[2] SIO Module 485 Communication Cable (one end with bare cut without connectors with terminal finishing) 120
[3] SIO Module 232C Communication Cable (one end with bare cut without connectors) 121

Chapter 4 Operation 122
4.1 Types of Operations 122
4.2 Starting the Controller 123
4.2.1 Power Supply and Cutoff 123
[1] Power Supply Sequence 123
[2] Power Cutoff Sequence 123
4.2.2 Panel Window Display 124
4.3 Program Operation 126
4.3.1 Auto Start upon Power On 126
4.3.2 Starting a Program by Specifying its Program Number 128
4.4 Receiving and Forwarding of I/O Signals Necessary for Operation 130
4.5 Position Table and Program Creation and Writing 133
4.6 How to Use Internal DIO 134
4.6.1 Internal DI and Dedicated Functions 134
4.6.2 7-Segment Display by User SEL Program 135
4.7 Standard Interface 138
4.8 Payload Adjusted for Setting Values 142
4.8.1 Work Moving Type Pulse Motor Specifications 143
4.8.2 Work Fixing Type Pulse Motor Specifications 144
4.8.3 Work Moving Type Servo Motor Low Lead Specifications 145
4.8.4 Work Moving Type Servo Motor High Lead specification 147
4.8.5 Work Fixing Type Servo Motor Low Lead Specifications 148
4.8.6 Work Fixing Type Servo Motor High Lead specification 150

Chapter 5 List of Parameters 151
5.1 I/O Parameters 152
5.2 All Axes Common Parameters 173
5.3 Axis-Specific Parameters 177
5.4 Driver Card Parameters 183
5.5 Encoder Parameters 188
5.6 I/O-Slot Card Parameters 190
5.7 Other Parameters 194
5.8 Parameters for Linear / Rotation Controls 199

Chapter 6 Error List 200
6.1 Error Level Control 200
6.2 Error List (MAIN Application) 203
6.3 Error List (MAIN Core) 236

Chapter 7 Appendix....239
7.1 Work and Tool Coordinate System Features for Linear Axis....239
7.1.1 Coordinates for Coordinate System Definition Unit....240
[1] Each Axis System....241
[2] Base Coordinate System....242
[3] Work Coordinate System....244
[4] Tool Coordinate System....249
7.1.2 Setting of parameters....253
7.1.3 Caution Note....256
[1] Limitation in Coordinate System Constructing Axes....256
[2] Note for Other Caution....257
7.2 Extension SIO Features....258
7.2.1 Specification....258
7.2.2 Functions....258
7.2.3 Caution....259
7.2.4 Parameter Setting....260
7.2.5 Example of Use....265

Chapter 8 Maintenance and Inspection....266
8.1 Inspection Items and Schedule....266
8.2 External visual inspection....266
8.3 Internal visual inspection....266
8.4 Cleaning....266
8.5 Grease Supply....267
8.5.1 Grease to Apply....267
8.5.2 Period of Time to Supply Grease....267
8.5.3 How to supply the grease....268
8.6 Replacement of Timing Belt....276
8.6.1 Inspecting the Belt....276
8.6.2 Applicable Belt....276
8.7 Period of Time for Fan Unit Replacement....296

Chapter 9 External Dimensions....297
9.1 Servo Motor Type, Pulse Motor Type (Battery-less Absolute Specification)....297
9.1.1 Work Moving Type....297
[1] Two-Axis: X & Y-Axes 200mm Stroke....297
[2] Two-Axis: X & Y-Axes 300mm Stroke....298
[3] Two-Axis: X & Y-Axes 400mm Stroke....299
[4] Two-Axis: X & Y-Axes 500mm Stroke....300
[5] Three-Axis: X & Y-Axes 200mm Stroke, Z-Axis 100mm/150mm Stroke....301
[6] Three-Axis: X & Y-Axes 300mm Stroke, Z-Axis 100mm/150mm Stroke....302
[7] Three-Axis: X & Y-Axes 400mm Stroke, Z-Axis 100mm/150mm Stroke....303
[8] Three-Axis: X & Y-Axes 500mm Stroke, Z-Axis 100mm/150mm Stroke....304
[9] Four-Axis: X & Y-Axes 200mm Stroke, Z-Axis 100mm/150mm Stroke....305
[10] Four-Axis: X & Y-Axes 300mm Stroke, Z-Axis 100mm/150mm Stroke....306
[11] Four-Axis: X & Y-Axes 400mm Stroke, Z-Axis 100mm/150mm Stroke....307
[12] Four-Axis: X & Y-Axes 500mm Stroke, Z-Axis 100mm/150mm Stroke....308
9.1.2 Work Fixing Type....309
[1] Two-Axis: X- Axis 200mm Stroke, Y-Axis 150mm Stroke....309
[2] Two-Axis: X- Axis 300mm Stroke, Y-Axis 250mm Stroke....310
[3] Two-Axis: X- Axis 400mm Stroke, Y-Axis 350mm Stroke....311
[4] Two-Axis: X- Axis 500mm Stroke, Y-Axis 450mm Stroke....312
[5] Three-Axis: X- Axis 200mm Stroke, Y-Axis 150mm Stroke, Z-Axis 100mm/150mm Stroke....313
[6] Three-Axis: X- Axis 300mm Stroke, Y-Axis 250mm Stroke, Z-Axis 100mm/150mm Stroke....314

[7] Three-Axis: X- Axis 400mm Stroke, Y-Axis 350mm Stroke, Z-Axis 100mm/ 150mm Stroke 315
[8] Three-Axis: X- Axis 500mm Stroke, Y-Axis 450mm Stroke, Z-Axis 100mm/ 150mm Stroke 316
[9] Four-Axis: X- Axis 300mm Stroke, Y-Axis 250mm Stroke, Z-Axis 100mm/ 150mm Stroke 317
[10] Four-Axis: X- Axis 300mm Stroke, Y-Axis 250mm Stroke, Z-Axis 100mm/ 150mm Stroke 318
[11] Four-Axis: X- Axis 400mm Stroke, Y-Axis 350mm Stroke, Z-Axis 100mm/ 150mm Stroke 319
[12] Four-Axis: X- Axis 500mm Stroke, Y-Axis 450mm Stroke, Z-Axis 100mm/ 150mm Stroke 320
9. 2 Pulse Motor Type (Incremental Specification) 321
9.2.1 Work Moving Type 321
[1] Two-Axis: X & Y-Axes 200mm Stroke 321
[2] Two-Axis: X & Y-Axes 300mm Stroke 322
[3] Two-Axis: X & Y-Axes 400mm Stroke 323
[4] Two-Axis: X & Y-Axes 500mm Stroke 324
[5] Three-Axis: X & Y-Axes 200mm Stroke, Z- Axis 100mm/150mm Stroke 325
[6] Three-Axis: X & Y-Axes 300mm Stroke, Z- Axis 100mm/150mm Stroke 326
[7] Three-Axis: X & Y-Axes 400mm Stroke, Z- Axis 100mm/150mm Stroke 327
[8] Three-Axis: X & Y-Axes 500mm Stroke, Z- Axis 100mm/150mm Stroke 328
[9] Four-Axis: X & Y-Axes 200mm Stroke, Z- Axis 100mm/150mm Stroke 329
[10] Four-Axis: X & Y-Axes 300mm Stroke, Z- Axis 100mm/150mm Stroke 330
[11] Four-Axis: X & Y-Axes 400mm Stroke, Z- Axis 100mm/150mm Stroke 331
[12] Four-Axis: X & Y-Axes 500mm Stroke,Z- Axis 100mm/150mm Stroke 332
9.2.2 Work Fixing Type 333
[1] Two-Axis: X-Axis 200mm Stroke, Y-Axis 150mm Stroke 333
[2] Two-Axis: X-Axis 300mm Stroke, Y-Axis 550mm Stroke 334
[3] Two-Axis: X-Axis 400mm Stroke, Y-Axis 350mm Stroke 335
[4] Two-Axis: X-Axis 500mm Stroke, Y-Axis 450mm Stroke 336
[5] Three-Axis: X-Axis 200mm Stroke, Y-Axis 150mm Stroke, Z-Axis 100mm/ 150mm Stroke 337
[6] Three-Axis: X-Axis 300mm Stroke, Y-Axis 250mm Stroke, Z-Axis 100mm/ 150mm Stroke 338
[7] Three-Axis: X-Axis 400mm Stroke, Y-Axis 350mm Stroke, Z-Axis 100mm/ 150mm Stroke 339
[8] Three-Axis: X-Axis 500mm Stroke, Y-Axis 450mm Stroke, Z-Axis 100mm/ 150mm Stroke 340
[9] Four-Axis: X-Axis 200mm Stroke, Y-Axis 150mm Stroke, Z-Axis 100mm/ 150mm Stroke 341
[10] Four-Axis: X-Axis 300mm Stroke, Y-Axis 250mm Stroke, Z-Axis 100mm/ 150mm Stroke 342
[11] Four-Axis: X-Axis 400mm Stroke, Y-Axis 350mm Stroke, Z-Axis 100mm/ 150mm Stroke 343
[12] Four-Axis: X-Axis 500mm Stroke, Y-Axis 450mm Stroke, Z-Axis 100mm/ 150mm Stroke 344
9.3 Option 345
9.3.1 Work Moving Type 345
[1] Option 345
[2] Frame Option 346
[3] Side Plate Option 347
[4] Side Slot Option 348
[5] Bracket-Equipped Option 349
9.3.2 Work Fixing Type 350
[1] Frame Option 350
[2] Side Slot Option 351

Chapter 10 Life.....353

Chapter 11 Warranty.....355
11.1 Warranty Period.....355
11.2 Scope of the Warranty.....355
11.3 Honoring the Warranty.....355
11.4 Limited Liability.....355
11.5 Conditions of Conformance with Applicable Standards/Regulations, Etc., and Applications.....356
11.6 Other Items Excluded from Warranty.....356

Change History.....357

Safety Guide

“Safety Guide” has been written to use the machine safely and so prevent personal injury or property damage beforehand. Make sure to read it before the operation of this product.

Safety Precautions for Our Products

The common safety precautions for the use of any of our robots in each operation.

No.	Operation Description	Description
1	Model Selection	● This product has not been planned and designed for the application where high level of safety is required, so the guarantee of the protection of human life is impossible. Accordingly, do not use it in any of the following applications. 1) Medical equipment used to maintain, control or otherwise affect human life or physical health. 2) Mechanisms and machinery designed for the purpose of moving or transporting people (For vehicle, railway facility or air navigation facility) 3) Important safety parts of machinery (Safety device, etc.) ● Do not use the product outside the specifications. Failure to do so may considerably shorten the life of the product. ● Do not use it in any of the following environments. 1) Location where there is any inflammable gas, inflammable object or explosive 2) Place with potential exposure to radiation 3) Location with the ambient temperature or relative humidity exceeding the specification range 4) Location where radiant heat is added from direct sunlight or other large heat source 5) Location where condensation occurs due to abrupt temperature changes 6) Location where there is any corrosive gas (sulfuric acid or hydrochloric acid) 7) Location exposed to significant amount of dust, salt or iron powder 8) Location subject to direct vibration or impact ● An axis on a robot that is used in vertical is equipped with a brake in standard. To apply a load with its weight more than the maximum transportable weight may disable the brake, which may result in damage on a work piece or an accident. Never attempt to do so.

No.	Operation Description	Description
2	Transportation	● When carrying a heavy object (approx. 20kg or more, with a heavy load warning sign), do the work with two or more persons or utilize equipment such as a hand cart or crane. ● When the work is carried out with 2 or more persons, make it clear who is to be the leader and who to be the follower(s) and communicate well with each other to ensure the safety of the workers. ● When in transportation, consider well about the positions to hold, weight and weight balance and pay special attention to the carried object so it would not get hit or dropped. ● Transport it using an appropriate transportation measure. When using a crane, have tough cloth or ropes as a hanging tool, wrap up the product considering the weight balance of it, and pay attention to safety to transport the product. ● Do not step or sit on the package. ● Do not put any heavy thing that can deform the package, on it. ● When using a crane capable of 1t or more of weight, have an operator who has qualifications for crane operation and sling work. ● When using a crane or equivalent equipments, make sure not to hang a load that weighs more than the equipment's capability limit. ● Use a hook that is suitable for the load. Consider the safety factor of the hook in such factors as shear strength. ● Do not get on the load that is hung on a crane. ● Do not leave a load hung up with a crane. ● Do not stand under the load that is hung up with a crane.
3	Storage and Preservation	● The storage and preservation environment conforms to the installation environment. However, especially give consideration to the prevention of condensation. ● Store the products with a consideration not to fall them over or drop due to an act of God such as earthquake.
4	Installation and Start	(1) Installation of Robot Main Body. ● Make sure to securely hold and fix the product (including the work part). A fall, drop or abnormal motion of the product may cause a damage or injury. Also, be equipped for a fall-over or drop due to an act of God such as earthquake. ● Do not get on or put anything on the product. Failure to do so may cause an accidental fall, injury or damage to the product due to a drop of anything, malfunction of the product, performance degradation, or shortening of its life. ● When using the product in any of the places specified below, provide a sufficient shield. 1) Location where electric noise is generated 2) Location where high electrical or magnetic field is present 3) Location with the mains or power lines passing nearby 4) Location where the product may come in contact with water, oil or chemical droplets

No.	Operation Description	Description
4	Installation and Start	(2) Cable Wiring ● Use our company's genuine cables for connecting power supply, and for the teaching tool. ● Make sure that the wiring of the power supply cable with a ring tongue terminal for 200V is conducted by a person who has knowledge of electricity and make sure that there is no looseness in fastening. Failure to do so may cause a fire, electric shock or error operation of the product. ● Do not scratch on the cable. Do not bend it forcibly. Do not pull it. Do not coil it around. Do not insert it. Do not put any heavy thing on it. Failure to do so may cause a fire, electric shock or malfunction due to leakage or continuity error. ● Perform the wiring for the product, after turning OFF the power to the unit, so that there is no wiring error. ● When the direct current power (+24V) is connected, take the great care of the directions of positive and negative poles. If the connection direction is not correct, it might cause a fire, product breakdown or malfunction. ● Connect the cable connector securely so that there is no disconnection or looseness. Failure to do so may cause a fire, electric shock or malfunction of the product. ● Never cut and/or reconnect the cables supplied with the product for the purpose of extending or shortening the cable length. Failure to do so may cause the product to malfunction or cause fire.
		(3) Grounding ● The grounding operation should be performed to prevent an electric shock or electrostatic charge, enhance the noise-resistance ability and control the unnecessary electromagnetic radiation. ● Make sure that grounding on the protection grounding terminal near the rear face inlet is conducted by a person with license using a stranded wires with 1.3mm^2 of diameter (AWG16 or equivalent) or more. For security grounding, it is necessary to select an appropriate wire thickness suitable for the load. Perform wiring that satisfies the specifications (electrical equipment technical standards).

No.	Operation Description	Description
4	Installation and Start	(4) Safety Measures ● When the work is carried out with 2 or more persons, make it clear who is to be the leader and who to be the follower(s) and communicate well with each other to ensure the safety of the workers. ● When the product is under operation or in the ready mode, take the safety measures (such as the installation of safety and protection fence) so that nobody can enter the area within the robot's movable range. When the robot under operation is touched, it may result in death or serious injury. Use a system I/O connector at the entrance of the safety protection fence to equip with an interlock system which makes the emergency stop works when the entrance is opened, and make sure to avoid entering from nowhere else but the entrance. ● Make sure to install the emergency stop circuit so that the unit can be stopped immediately in an emergency during the unit operation. ● Take the safety measure not to start up the unit only with the power turning ON. Failure to do so may start up the machine suddenly and cause an injury or damage to the product. ● Take the safety measure not to start up the machine only with the emergency stop cancellation or recovery after the power failure. Failure to do so may result in an electric shock or injury due to unexpected power input. ● When having a work to install or tune the robot without operating, take the power supply cable off the inlet. Sudden power input may cause an electric shock or injury. ● If an operator is compelled to work in the safety protection fence, make sure to wear helmet, goggle and safety shoes to secure safety. ● Wear protection gloves, goggle or safety shoes, as necessary, to secure safety. ● Do not insert a finger or object in the openings in the product. Failure to do so may cause an injury, electric shock, damage to the product or fire. ● When releasing the brake on a vertically oriented actuator, exercise precaution not to pinch your hand or damage the work parts with the axis dropped by gravity. ● When you announce the EC Declaration of Conformity for the equipment that this robot is in the structure, apply a clamp filter to each fieldbus cable if necessary in order to comply with the EMC Directive.
5	Teaching	● When the work is carried out with 2 or more persons, make it clear who is to be the leader and who to be the follower(s) and communicate well with each other to ensure the safety of the workers. ● Perform the teaching operation from outside the safety protection fence, if possible. In the case that the operation is to be performed unavoidably inside the safety protection fence, prepare the "Stipulations for the Operation" and make sure that all the workers acknowledge and understand them well. ● When the operation is to be performed inside the safety protection fence, the worker should have an emergency stop switch at hand with him so that the unit can be stopped any time in an emergency. ● When the operation is to be performed inside the safety protection fence, in addition to the workers, arrange a watchman so that the machine can be stopped any time in an emergency. Also, keep watch on the operation so that any third person can not operate the switches carelessly. ● Place a sign "Under Operation" at the position easy to see. ● When releasing the brake on a vertically oriented actuator, exercise precaution not to pinch your hand or damage the work parts with the actuator dropped by gravity.

No.	Operation Description	Description
6	Trial Operation	● When the work is carried out with 2 or more persons, make it clear who is to be the leader and who to be the follower(s) and communicate well with each other to ensure the safety of the workers. ● After the teaching or programming operation, perform the check operation one step by one step and then shift to the automatic operation. ● When the check operation is to be performed inside the safety protection fence, perform the check operation using the previously specified work procedure like the teaching operation. ● Make sure to perform the programmed operation check at the safety speed. Failure to do so may result in an accident due to unexpected motion caused by a program error, etc. ● Do not touch the terminal block or any of the various setting switches in the power ON mode. It may cause an accident due to unexpected motion caused as it is feasible to build a program to move the actuator in speed of 250mm/s or more.
7	Automatic Operation	● Check before starting the automatic operation or rebooting after operation stop that there is nobody in the safety protection fence. ● Before starting automatic operation, make sure that all peripheral equipment is in an automatic-operation-ready state and there is no alarm indication. ● Make sure to operate automatic operation start from outside of the safety protection fence. ● Take the power supply cable off the inlet immediately if any abnormal heat radiation, smoke emission, smell or noise is confirmed from the product. Failure to do so may result in a fire or damage to the product. ● When a power failure occurs, turn OFF the power switch. Failure to do so may cause an injury or damage to the product, due to a sudden motion of the product in the recovery operation from the power failure.

No.	Operation Description	Description
8	Maintenance and Inspection	● When the work is carried out with 2 or more persons, make it clear who is to be the leader and who to be the follower(s) and communicate well with each other to ensure the safety of the workers. ● Perform the work out of the safety protection fence, if possible. In the case that the operation is to be performed unavoidably inside the safety protection fence, prepare the “Stipulations for the Operation” and make sure that all the workers acknowledge and understand them well. ● When the work is to be performed inside the safety protection fence, turn OFF the power switch. ● When the operation is to be performed inside the safety protection fence, the worker should have an emergency stop switch at hand with him so that the unit can be stopped any time in an emergency. ● When the operation is to be performed inside the safety protection fence, in addition to the workers, arrange a watchman so that the machine can be stopped any time in an emergency. Also, keep watch on the operation so that any third person can not operate the switches carelessly. ● Place a sign “Under Operation” at the position easy to see. ● For the grease for the guide or ball screw, use appropriate grease according to the instruction manual for each model. ● Do not perform the dielectric strength test. Failure to do so may result in a damage to the product. ● When releasing the brake on a vertically oriented actuator, exercise precaution not to pinch your hand or damage the work parts with the axis dropped by gravity. ● The slider or rod may get misaligned OFF the stop position if the servo is turned OFF. Be careful not to get injured or damaged due to an unnecessary operation. ● 4-ϕ44 holes at the back of TTA-A3(S)-50**-50**/TTA-C3(S)-50**-45** are those necessary for machining inside, but are not for use in normal use, thus they are covered with grommets. In case a grommet is lost, cover the hole with adhesive tape and so on in order to protect from small animals such as insects getting inside. ● Pay attention not to lose the cover or untightened screws, and make sure to put the product back to the original condition after maintenance and inspection works. Use in incomplete condition may cause damage to the product or an injury.
9	Modification and Dismantle	● Do not modify, disassemble, assemble or use of maintenance parts not specified based at your own discretion.
10	Disposal	● When the product becomes no longer usable or necessary, dispose of it properly as an industrial waste. ● When removing the robot for disposal, pay attention to drop of components when detaching screws. ● Do not put the product in a fire when disposing of it. The product may burst or generate toxic gases.
11	Other	● See Overseas Specifications Compliance Manual to check whether complies if necessary. ● In order for you to use the device safely, it is recommended you construct the emergency circuit and enable circuit (3.2.2 [5]) equivalent to Safety Category 3 in your equipment. ● This product is designed assuming that installation to the factory equipment is held by a specialist (who has read the contents of the instruction manual narrowly and understands how to use, or who has attended to the necessary trainings held by IAI). ● Work operation in any trouble or maintenance is also allowed only to the specialists.

Alert Indication

The safety precautions are divided into “Danger”, “Warning”, “Caution” and “Notice” according to the warning level, as follows, and described in the instruction manual for each model.

Level	Degree of Danger and Damage	Symbol
Danger	This indicates an imminently hazardous situation which, if the product is not handled correctly, will result in death or serious injury.	Danger
Warning	This indicates a potentially hazardous situation which, if the product is not handled correctly, could result in death or serious injury.	Warning
Caution	This indicates a potentially hazardous situation which, if the product is not handled correctly, may result in minor injury or property damage.	Caution
Notice	This indicates lower possibility for the injury, but should be kept to use this product properly.	Notice

Explanation of Caution Labels Attached on Devices

The actuator you have purchased may have labels as shown below attached on the body.
If you have a model with such labels attached on, make sure you understand the meanings well and pay attention in order to perform safe operation.

1) Electric Shock Caution Label



Electric Shock Caution
High pressure is applied on the live part for this model.
As there is a risk of getting an electric shock, make sure to turn off the power before taking the connectors off for service and maintenance purpose.

2) Heavy Object Transport Caution Label



Heavy Object Transport Caution
This model is a heavy object with 20kg weight or more.
Make sure to have two persons or more when carrying in order to avoid hurting your back.

Caution in Handling

1. Make sure to follow the usage condition, environment and specification range of the product.
   In case it is not secured, it may cause a drop in performance or malfunction of the product.

2. Do not conduct any treatment or operation that is not stated in this instruction manual.

3. Make sure to attach the Tabletop Robot properly by following this instruction manual.
   Using the product with the robot not being certainly retained or affixed may cause abnormal noise, vibration, malfunction or shorten the product life.

4. Do not attempt to establish the settings for the speed and acceleration/ deceleration above the allowable range.
   If the robot is operated at a speed or acceleration/deceleration exceeding the allowable value, abnormal noise or vibration, failure, or shorter life may result.

5. Keep the load moment within the allowable value.
   If the actuator is operated under a load (refer to 1.2.6) equal to or greater than the allowable load moment, abnormal noise or vibration, failure, or shorter life may result. If it is extreme, flaking may occur on the guide.

6. Set the overhang length within the allowable range.
   The overhang length load (refer to 1.2.6) above the allowable range may cause vibration or abnormal noise.

7. Back and forth operation in a short distance may cause wear of grease.
   If the actuators are moved back and forth continuously over a short distance of 30 mm or less, grease film may run out. As a guide, move the actuators back and forth repeatedly for around 5 cycles over a distance of 50 mm or more after every 5,000 to 10,000 cycles. Continuously using the actuators with the grease worn out may cause malfunction. If it is extreme, flaking may occur on the guide.

8. Time till stop after pressing emergency stop button
   Use it at the rated load or below. The stop time and the stop distance described below will differ depending on the load.

TTA-	A2/3/4G C2/3/4G	A2S/3S/4SLG C2S/3S/4SLG	A2S/3S/4SHG C2S/3S/4SHG	Remarks
Speed [mm/s]	800	600	1200	TTA Max. Speed
Emergency Deceleration [G]	0.3	0.3	0.3	Default Value
Stop Time [s]	0.27	0.21	0.41	With no load
Stop Distance [m]	0.11	0.06	0.25	With no load

9. Rescue at Emergency

It is recommended to construct a safety protection fence by 2.4 around this robot and that an operator works outside the safety protection fence. In case of you getting stuck in this robot;

1) Press the emergency stop switch, and the X and Y-axes stay at the position and Z-axis will be available to make move manually by the brake release switch on the front panel, or
2) After cutting off the power supply immediately by taking the power supply cord off the inlet, it is available to release mechanically with the slider position tuning volume (Z-axis).

About Safety Protection Fence

Considering safety, it is recommended to have a safety protection fence to prevent possible danger.
For Machinery Directive (2006/42/EC) in EU Directives, equip with safety protection fence.
Use a system I/O connector at the entrance of the safety protection fence to equip with an interlock system which makes the emergency stop works when the entrance is opened, and make sure to avoid entering from nowhere else but the entrance.

Rear Panel Side of Main Body

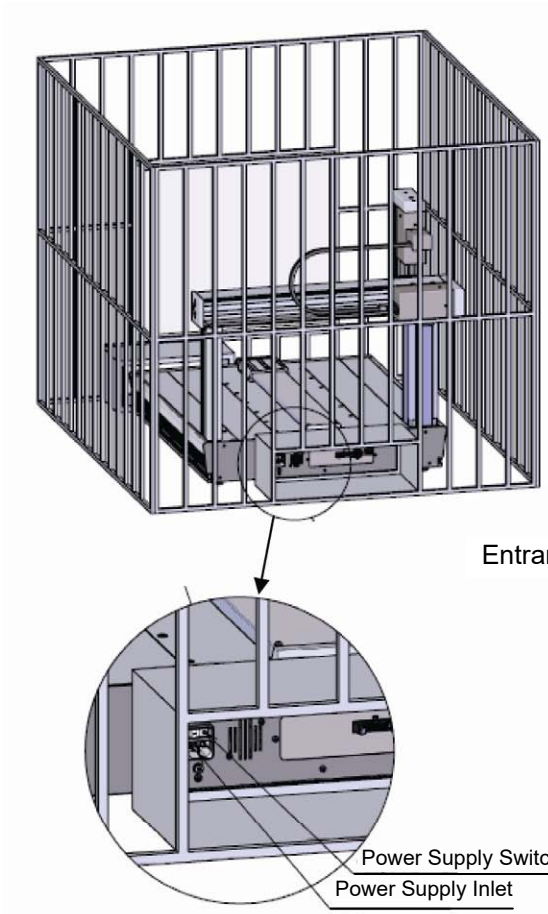

Detail Power Supply Part
Scale 1:4
Have an enclosure around the power supply switch and the power supply inlet so they can be operated from outside the fence.

Front Panel Side of Main Body

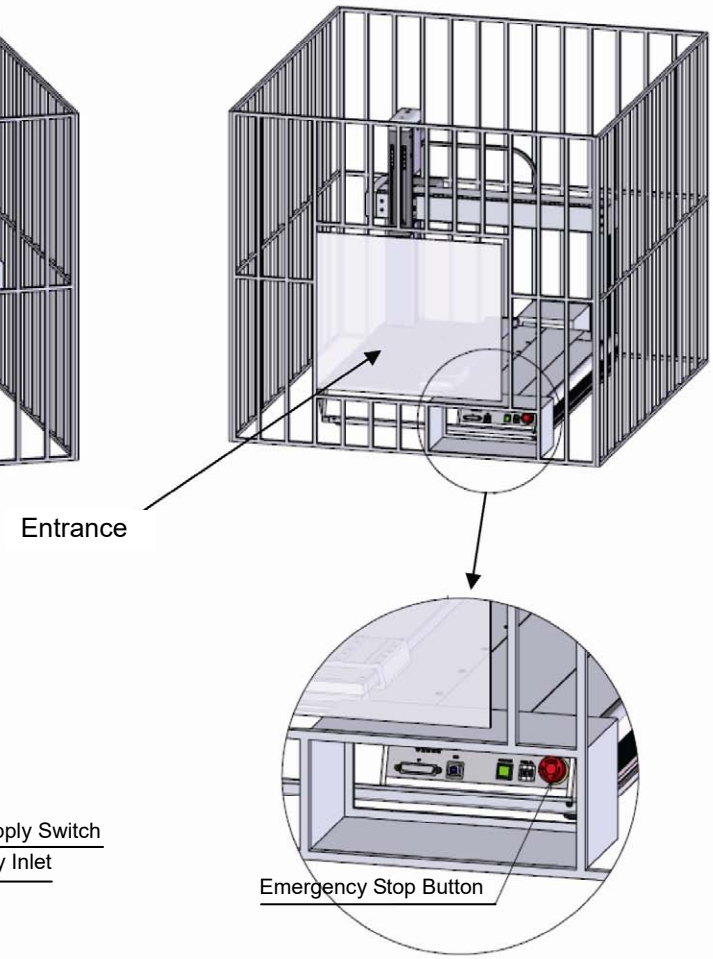

Detail Emergency Stop Button Part
Scale 1:4
Have an enclosure around the emergency button so it can be operated from outside the fence.

Dimensions for Safety Protection Fence

Secure 200mm at least above the product dimensions for the dimensions of the safety protection fence.

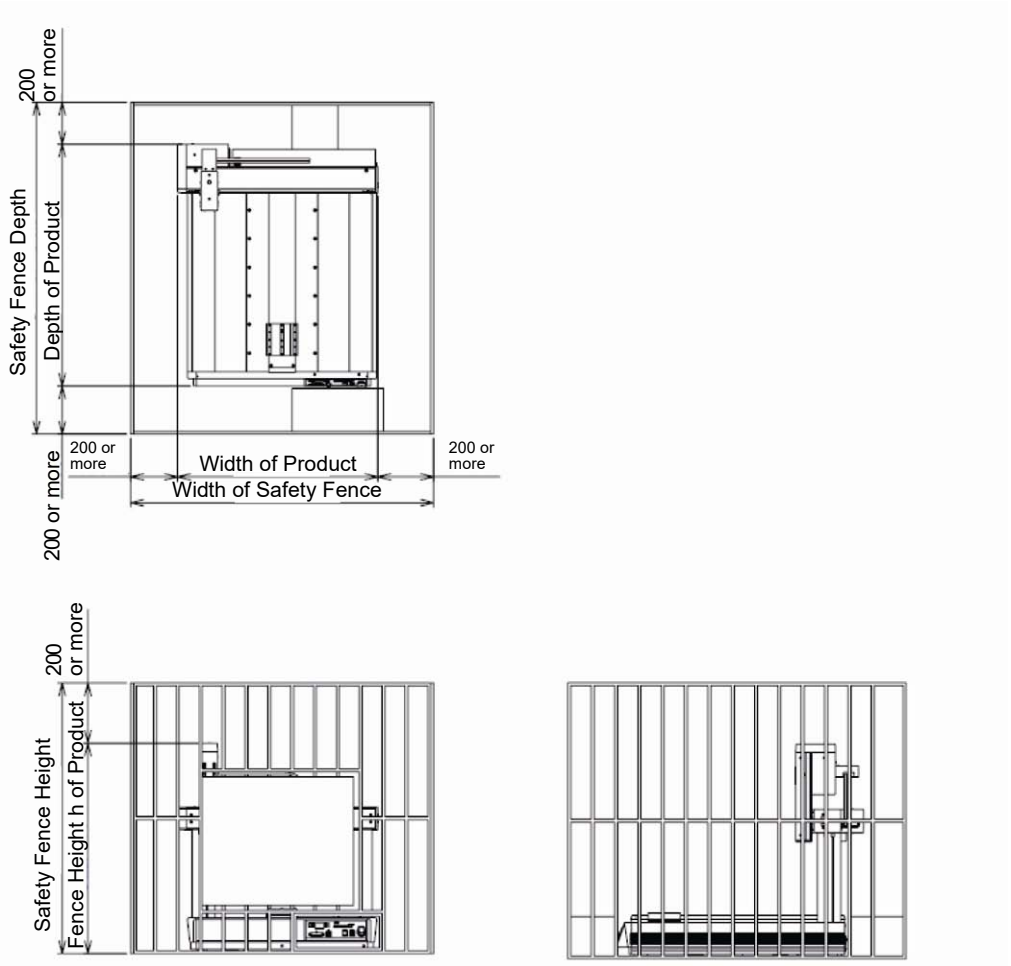

International Standards Compliances

This robot complies with the following overseas standard.
However, check with our sales person at the order for the model names for the CE marking compliable model and KCs marking compliable model as they differ from the name for the standard ones.

Check in Overseas Standards Compliable Manual (ME0287) for the details of CE Mark compliable model.

RoHS Directive	CE Marking	KCs Marking
○	○	○

○ : Compliable

When you desire to declare conformity to EC with this product in your facility, this product itself is declared to conform to EU under specific conditions as described below. You can use this declaration for your facility.

EU Directives declared for conformity to EC

EMC Directive (2014/30/EU) • • • Confirm with CE mark printed on the product label
RoHS Directive (2011/65/EU) • • • Same as above
Machinery Directive (2006/42/EC) • • • Confirm with attached Declaration of Conformity to EC

There is Declaration of Conformity to EC attached in next page to prove that the product is complied with Machinery Directive.
This Declaration of Conformity to EC may change without any notice in case of new addition of complied models or any specification change. Please contact our sales person when you need the latest one.

IAI
Quality and Innovation

IAI CORPORATION
577-1 Obane, Shimizu-Ku, Shizuoka City, Shizuoka 424-0103 Japan

EC DECLARATION OF CONFORMITY

Manufacturer:

IAI CORPORATION
577-1 Obane, Shimizu-Ku, Shizuoka City, Shizuoka 424-0103 Japan

Authorized representative within the Community:

IAI Industrieroboter GmbH
Ober der Röth 4, D-65824 Schwalbach am Taunus, Germany

Hereby declares that the equipment described below

complies with the provisions of the below European Directives and the harmonized standards.

Equipment:

Table Top Type Robot
(TTA series)

Models covered are shown after the following page

We can provide electronic data of relevant information on the partly completed machinery in response to a reasonable request by the national authorities.

And also we request that the partly completed machinery must not be put into service until the final machinery has been declared in conformity with the provisions of Machinery Directive.

- Machinery Directive: 2006/42/EC
  EN ISO 12100:2010, EN ISO 13849-1:2008,
  EN ISO 10218-1:2011

- EMC Directive: 2014/30/EU
  EN 55011: 2009/A1:2010, EN 61000-6-2: 2005,
  EN 61000-3-2: 2006/A2:2009, EN 61000-3-3: 2008

- RoHS Directive: 2011/65/EU
  EN 50581: 2012

Done at Shizuoka, Japan,

On 24, Dec. , 2015

CE

President Toru Ishida

ORIGINAL

IAI CORPORATION
577-1 Obane, Shimizu-Ku, Shizuoka City, Shizuoka 424-0103 Japan

TTA Stepping Motor Models

TTA – □ - □ - □□ - □ □ - □□ - □□ - □ - □ - □ - □ - □ - □ - **
① ② ③ ④ ⑤ ⑥ ⑦ ⑧⑨ ⑩⑪ ⑫ ⑬ ⑭ ⑮ ⑯ ⑰ ⑱

<Series>

<Type>
A2G/A3G/A4G :
Table Moving 2/3/4 Axes
C2G/C3G/C4G :
Cantilever 2/3/4 Axes

<Encoder Type>
I : Incremental
WA : Batteryless absolute

<X Axis Stroke>
20 : 200mm
30 : 300mm
40 : 400mm
50 : 500mm

<X Axis Option>
HS : With home position confirm sensor
(Encoder Type [I] only)
NM : Reversed home position

<Y Axis Stroke>
20 : 200mm (A*G) 、15 : 150mm (C*G)
30 : 300mm (A*G) 、25 : 250mm (C*G)
40 : 400mm (A*G) 、35 : 350mm (C*G)
50 : 500mm (A*G) 、45 : 450mm (C*G)
* : 2 or 3 or 4

<Y Axis Option>
HS : With home position confirm sensor
(Encoder Type [I] only)
NM : Reversed home position

<Z Axis Stroke>
10 : 100mm
15 : 150mm

<Z Axis Option>
B : With brake (Normal)
CO : With cover (Only 4 axis model)
HS : With home position confirm sensor
(Encoder Type [I] only)
NM : Reversed home position

<R Axis Stroke>
18L : ±180 degree with limit sensor (Encoder Type [I])
18 : ±180 degree (Encoder Type [WA])
36L : ±360 degree with limit sensor

<R Axis Option>
ML : Motor left reversed (Normal)
MR : Motor right reversed

<Standard Slot>
NP : NPN type
PN : PNP type

Identification for IAI use only (Note1)

<Option>
H1 :
H2 : Y axis moment position change
F1 :
F2 :
FT* : With *pieces of bracket
AP : Support added for 2020
OS : Detachable unit
SLT0: Side slot180mm
SLT : Side slot for stroke
PTH : Side plate with hole
PTN : Side plate w/o hole
FZ : ZR axis mounting position 64.5mm forward

<Power supply cable>
PU : Only with plug on main unit side
1 : Power supply cable for 100 VAC (2m)
2 : Power supply cable for 200 VAC (2m)

<I/O Cable Length>
0 : None
2 : 2m
3 : 3m
5 : 5m

<Extension Slot1><Extension slot2>
E : No use
NP : Extension I/O board for NPN
PN : Extension I/O board for PNP
DV : DeviceNet connection board
CC : CC-Link connection board
PR : PROFIBUS-DP connection board
EP : EtherNet/IP connection board
EC: EtherCAT connection board
IA : IA-NET connection board
SE1:Extension SIO for RS232C
SE2:Extension SIO for RS485
○: Switch number 1-4
△: Color of switch button
B : Blue
G : Green
R : Red
W : White
Y : Yellow
□: Specification of switch
None
L : Lock type switch
C : With cover on button
CL: With cover on switch button

IAI Quality and Innovation

IAI CORPORATION

577-1 Obane, Shimizu-Ku, Shizuoka City, Shizuoka 424-0103 Japan

TTA AC Servo Motor Models

TTA – □ ① - □ ② - □ ③ □ ④ ⑤ - □ □ ⑥ ⑦ - □□ ⑧⑨ - □□ ⑩⑪ - □ ⑫ - □ ⑬ - □ ⑭ - □ ⑮ - □ ⑯ - □ ⑰ - ** ⑱

<Series>

<Type>
A2S*G/A3S*G/A4S*G :
Table Moving 2/3/4 Axes
C2S*G/C3S*G/C4S*G :
Cantilever 2/3/4 Axes
*: L Low Lead
H High Lead

<Encoder Type>
WA : Batteryless absolute
A : Absolute with battery

<X Axis Stroke>
20 : 200mm
30 : 300mm
40 : 400mm
50 : 500mm

<X Axis Option>
NM : Reversed home position

<Y Axis Stroke>
20 : 200mm (A+S*G) 、15 : 150mm (C+S*G)
30 : 300mm (A+S*G) 、25 : 250mm (C+S*G)
40 : 400mm (A+S*G) 、35 : 350mm (C+S*G)
50 : 500mm (A+S*G) 、45 : 450mm (C+S*G)
+ : 2 or 3 or 4 、 * : L or H

<Y Axis Option>
NM : Reversed home position

<Z Axis Stroke>
10 : 100mm
15 : 150mm

<Z Axis Option>
B : With brake (Normal)
CO : With cover (Only 4 axis model)
NM : Reversed home position

<R Axis Stroke>
18 : ±180 degree
36L : ±360 degree with limit sensor

<R Axis Option>
ML : Motor left reversed (Normal)
MR : Motor right reversed

<Standard Slot>
NP : NPN type
PN : PNP type

Identification for IAI use only

<Option>
H1 :
H2 : Y axis moment position change
F1 :
F2 :
FT* : With main unit bracket
AP : Support added for 2020
OS : With detachable unit
SLTO: Side slot180mm
SLT : Each stroke side slot
PTH : Side plate with hole
PTN : Side plate w/o hole
FZ : ZR axis mounting position 64.5mm forward

<Power supply cable>
PU : Only with plug on main unit side
1 : Power supply cable for 100 VAC (2m)
2 : Power supply cable for 200 VAC (2m)

<I/O Cable Length>
0 : None
2 : 2m
3 : 3m
5 : 5m

<Extension Slot2>
E : No use
NP : Extension I/O board for NPN
PN : Extension I/O board for PNP
DV : DeviceNet connection board
CC : CC-Link connection board
PR : PROFIBUS-DP connection board
EP : EtherNet/IP connection board
EC: EtherCAT connection board
IA : IA-NET connection board
SE1:Extension SIO for RS232C
SE2:Extension SIO for RS485
○: Switch number 1-4
△: Color of switch button
B : Blue
G : Green
R : Red
W : White
Y : Yellow
□: Specification of switch
None
L : Lock type switch
C : With cover on button
CL: With cover on switch button

Name and Function of Each Part

<Front Side>

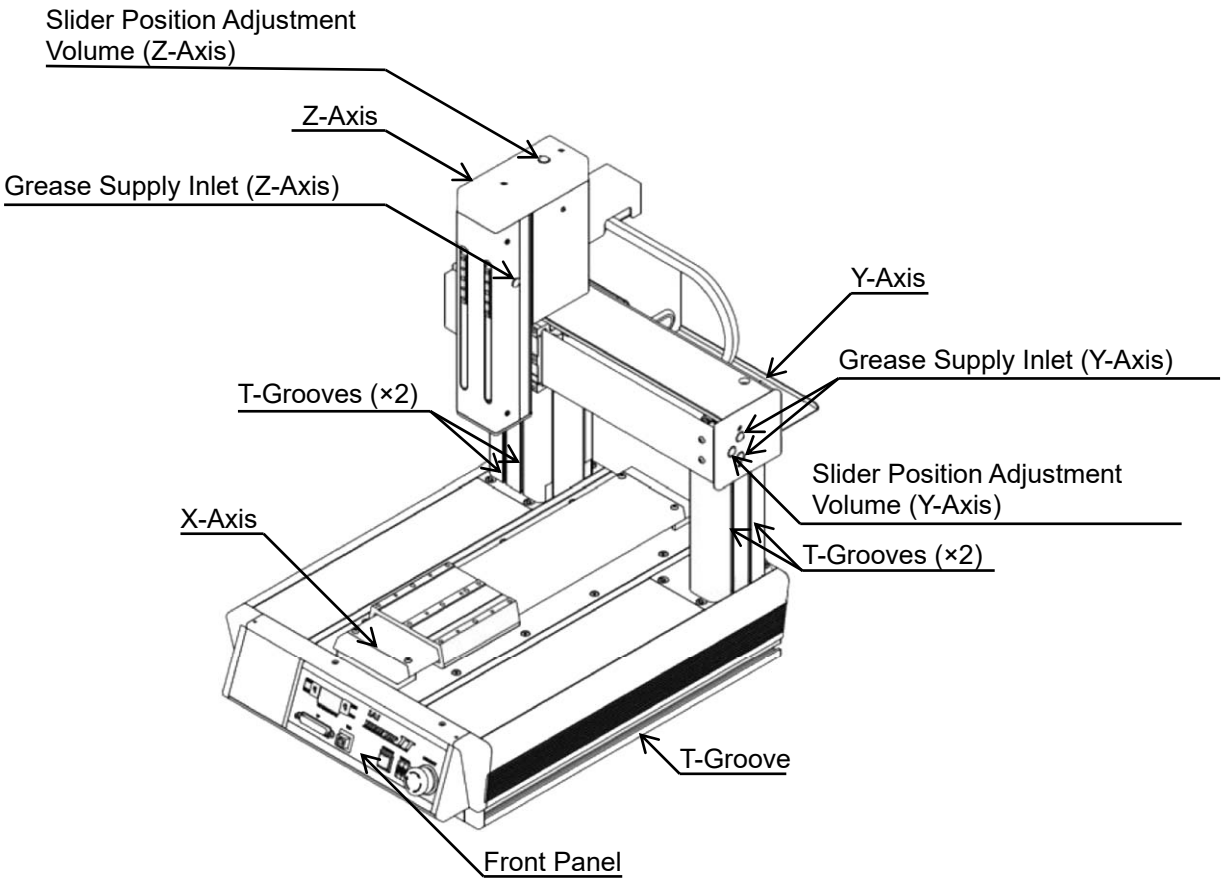

<Rear Side>

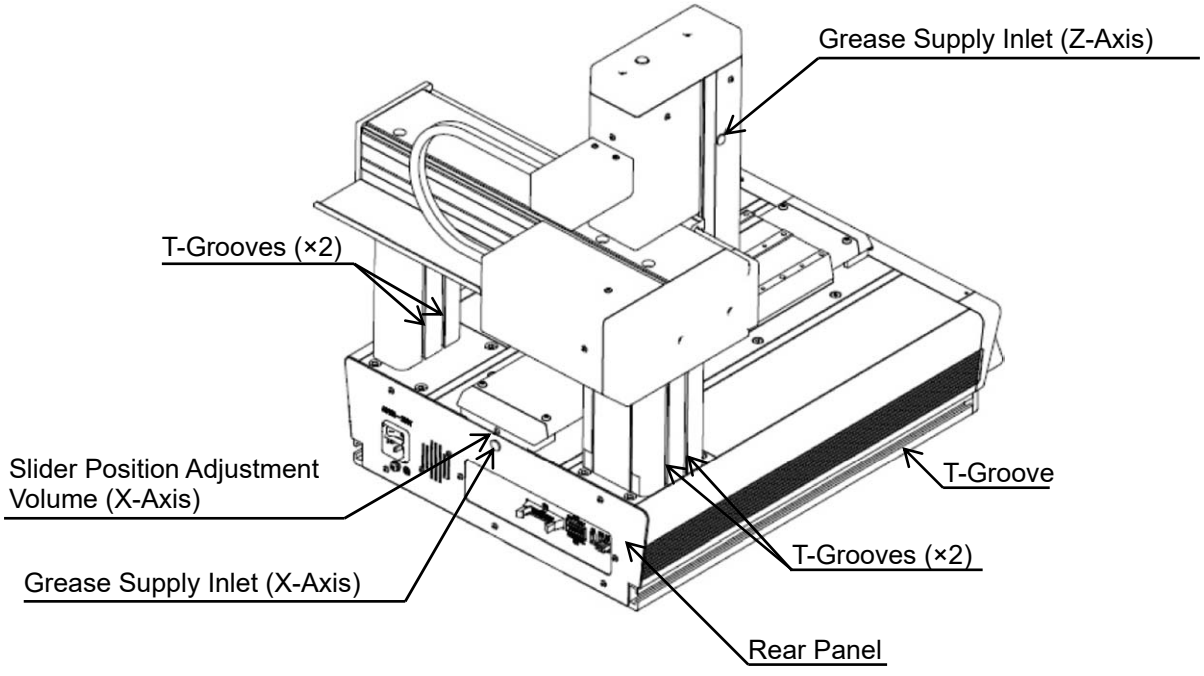

<Details of Front Panel>

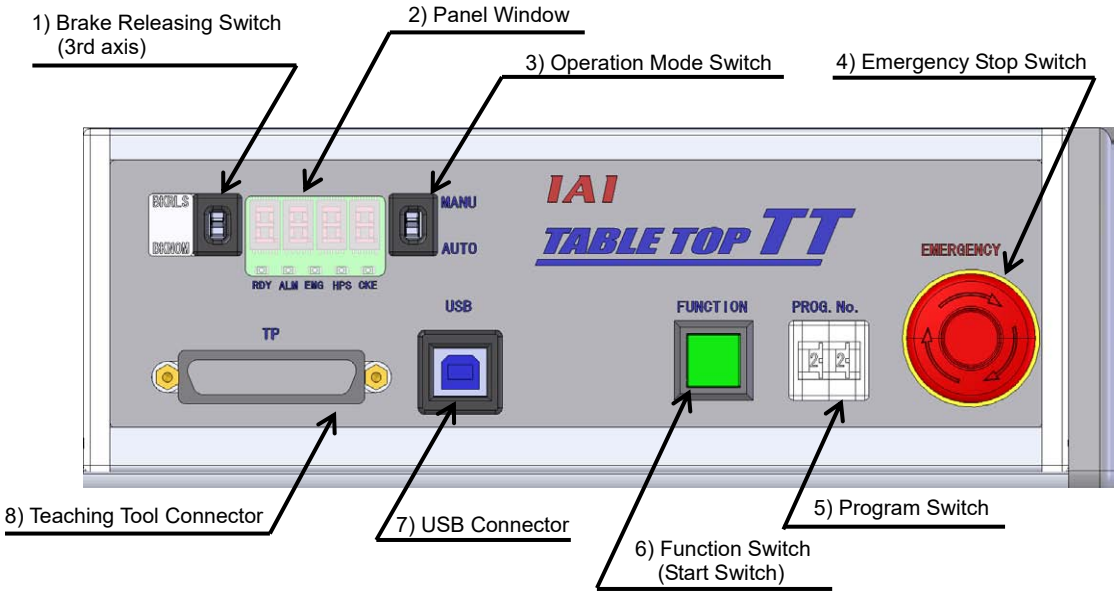

1) Brake Releasing Switch (3rd axis)
It is a switch to release the Z-axis brake.
It is set to the compulsory brake release by putting it upside (BKRLS side), and automatic control by controller by putting it downside (BKNOM). It should be set downside (BKNOM) in ordinary use.



Switch Condition	Description
BKNOM	Brake control by controller internal process. Ordinary setting
BKRLS	Electromagnetic Brake Compulsory Release

⚠ Caution: This switch will not be activated unless the main power is turned on.

2) Panel Window

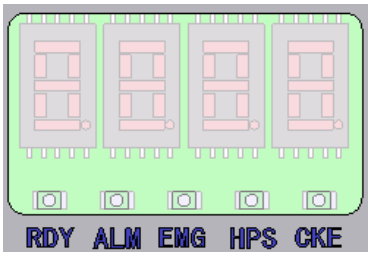

It is constructed with four digits of 7-seg LEDs that shows the status of the equipment and five LED lamps.
The table below shows the status when each LED lamp is turned on.

Name	Display Color	Status	Description
RDY	Green	Illuminated	PIO program operation is available. (connected to Dedicated Output No. 301)
ALM	Orange	Illuminated	An error of operation cancel level or above has been generated. (connected to Dedicated Output No. 300)
EMG	Red	Illuminated	In emergency stop. (connected to Dedicated Output No. 302)
HPS	Green	Illuminated	Home-return operation complete on all axes. (connected to Dedicated Output No. 304)
CKE	Orange	Illuminated	System clock error.

Refer to table below or “Chapter 6 Error List” for the details of the display on 4-digit 7-seg LED window.

Application Display Specifications

Display				Priority (Note 1)	Description
	A	C	F	1	AC power is cut off. (including momentary power failure or drop in power-source voltage)
E	F	*	*	1	System-down level error
8	8	8	8	2	Illumination test on all of 7-seg LEDs (Initialization sequence)
I	n	*	*	2	Initialization sequence number
I	n	n	*	2	Display of field network board initializing sequence
	P	r	d	3	Writing data to the flash ROM.
	E	r	G	4 (Display switchover)	Emergency stop is being actuated (except during the update mode)
	e	n	b	4 (Display switchover)	Enable switch (deadman switch/safety gate) OFF (except in the update mode)
E	E	*	*	4 (Display switchover)	Cold-start level error (Most critical level system error)
E	D	*	*		
E	6	*	*		
E	5	*	*		
E	C	*	*	4 (Display switchover)	Operation-cancellation level error (Most critical level system error)
E	B	*	*		
E	4	*	*		
-		r	P	5	Waiting for drive cutoff analysis input (except during the update mode)
-		r	S	5	Operation is in pause (waiting for restart) (except during the update mode)
-	I	L	C	6	All servo axes are interlocked (except during the update mode)
E	A	*	*	7	Message level error (Most critical level system error)
E	9	*	*		
E	2	*	*		
P	*	*	*	8	A program is running (last started program). (*** indicates the program number)
A	r	d	y	8	Ready status (AUTO mode)
	r	d	y	8	Ready status (MANU mode)

Note 1: Smaller numbers show more priority than bigger ones.

Core Display Specifications

Display				Priority (Note 1)	Description
E	E	*	*	1	Cold-start level error
E	C	*	*	1	Operation-cancellation level error
E	A	*	*	2	Message level error
r	U	d		2	In updating mode
	J	P	A	2	Jump to the application
C	H	F	C	2	Core flash ROM check process
C	H	F	A	2	Application flash ROM check process
C	H	S	d	2	SDRAM check process

Note 1: Smaller numbers show more priority than bigger ones.

3) Operation Mode Switch

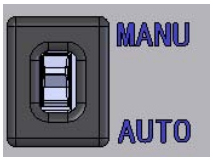

It is a switch to indicate the operation mode of Table-Top Robot.
It is set to MANU Mode (manual mode) by putting it upside and AUTO Mode (automatic mode) by putting it downside.
When editing a program or setting a parameter, set it to MANU Mode and use a teaching tool (PC software or teaching pendant) to conduct the setting. (It is not available in AUTO Mode.)
To start up the auto start program, it is to be conducted in AUTO Mode. (It is not available in MANU Mode.)

Status	Description
AUTO	Automatic mode. Used mainly in automatic operation
MANU	Manual mode. Used mainly in teaching

4) Emergency Stop Switch

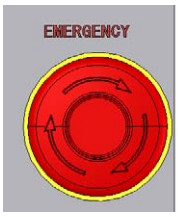

It turns to the emergency stop condition by pressing it. To cancel, twist it to the right or pull it.
In the emergency stop condition, the driving source is cut off.

5) Program Switch

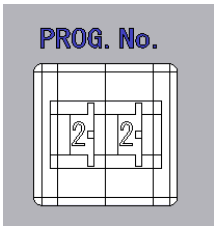

It is the two-digit decimal digital switch input to set the program number to start up from the group of programs stored in Table-Top Robot. By turning the 6) Start Switch ON, the set program starts
The setting range is from 0 to 99, and assigned to Internal DI: 007 to 014.

6) Function Switch (Start Switch)

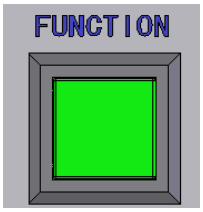

It is a switch to start up the program set on the 5) Program Switch.
This switch is enabled in the AUTO mode. AUTO Mode/MANU Mode are to be switched over on 3) Operation Mode Switch.
In the MANU mode, this switch is enabled after the teaching pendant or PC software has been connected online. (Once the teaching pendant or PC software is connected online, the switch will remain enabled until the robot is restarted (via software reset), even after the connection is switched offline.)
(This switch turns ON/OFF input port No. 000. Although, at the delivery, Input Port No. 000 is set as the program start signal (dedicated input), it is available to use Input Port No. 000 as a general-purposed input by setting I/O Parameter No. 30 = 0.

7) USB Connector
This connector is used for USB connection. Use it to connect the PC software to the controller via USB cable.
Applicable connector: USB connector B

⚠ Caution:
- When using the USB ports, it is necessary to install the USB driver in the CD-ROM “X-SEL Applicable Software IA-101-TT-USB” to all the TTA to be connected by connecting them one by one. Refer to “X-SEL PC Applicable Software” Instruction Manual for how to install the driver.
- When using the USB ports, it is necessary to apply the dummy plug on 8) Teaching Tool Connector.
  Dummy plug model code: DP-2

8) Teaching Tool Connector
It is a D-sub 25-pin connector that the optional teaching pendant or PC software is to be connected to when the operation mode is in MANU.

<How to Take off Front Panel>

[For Operation Part Removable Type (OS)]

1) Detach the front base cap.

2) Detach the front base cover by sliding it.

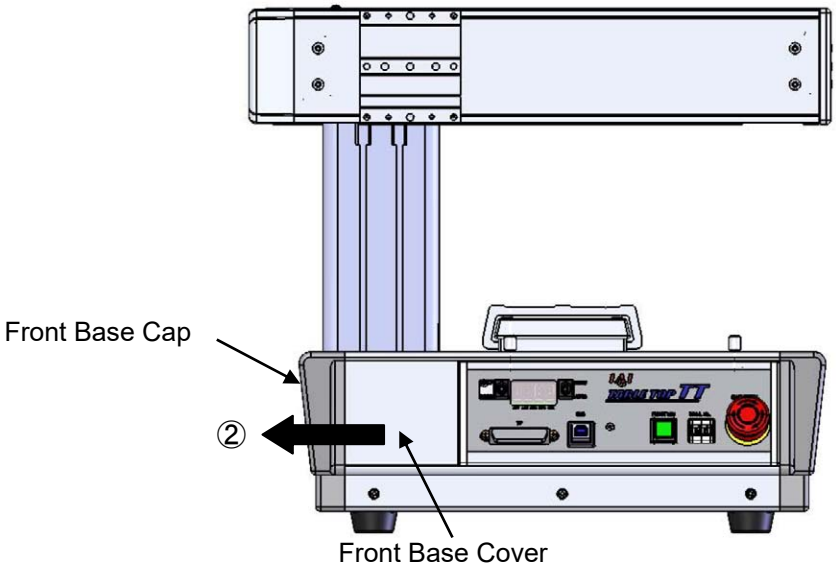

3) Detach the screws (2 places).

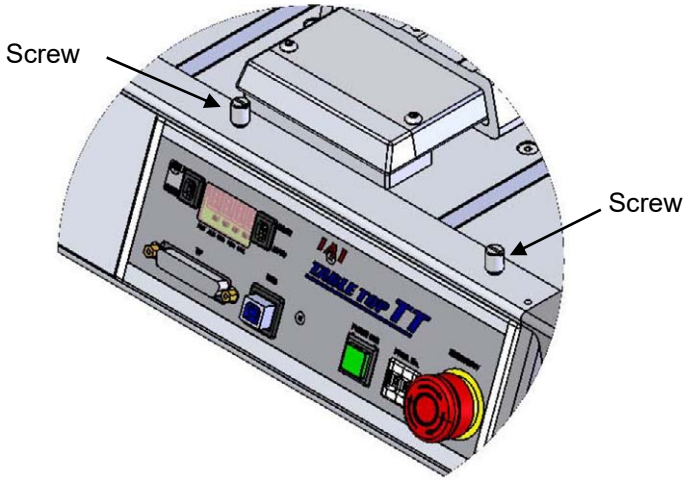

<Details of Rear Panel>

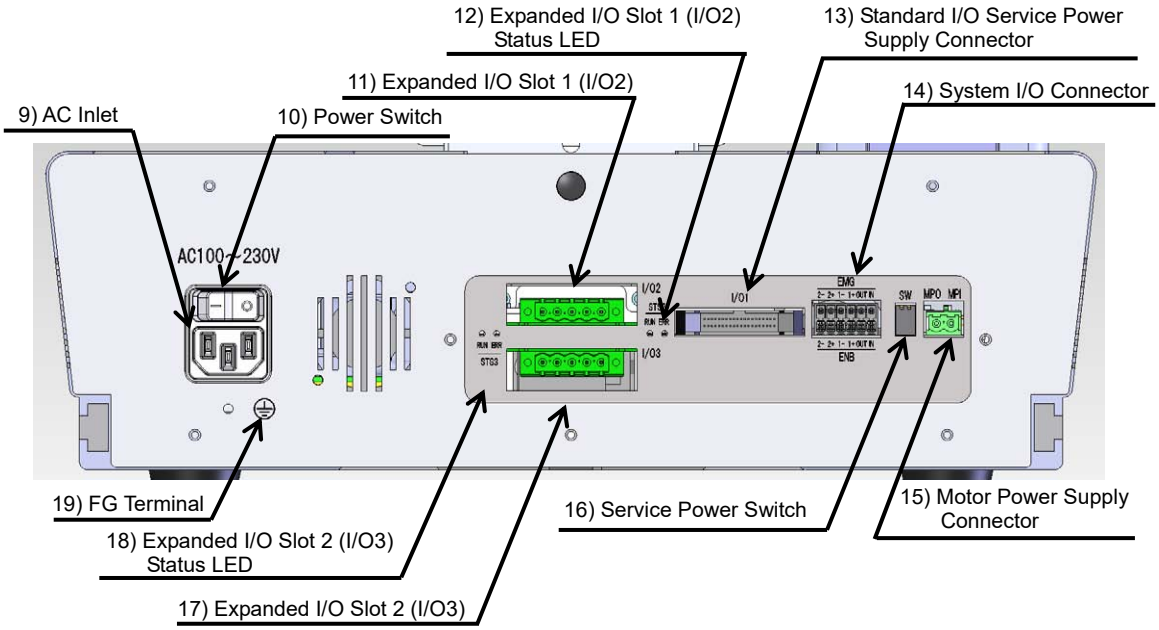

9) AC Inlet
Connect the power supply cable.
Apply the enclosed socket on the power supply connector.
(Note) Make sure to prepare a cable suitable for the power voltage used to the enclosed socket for wiring.
Input power voltage range: 100 to 230V AC ±10%

10) Power Switch
It is a switch to turn the main power supply ON/OFF.

11) Expanded I/O Slot 1 (I/O2)
17) Expanded I/O Slot 2 (I/O3)
With the combination of extension DIO, DeviceNet, CC-Link, PROFIBUS-DP and EtherNet/IP etc, two modules at the maximum are available to mount. (However, only EtherNet/IP is one module.)

12) Expanded I/O Slot 1 (I/O2) Status LED
18) Expanded I/O Slot 2 (I/O3) Status LED

Depending on the mounted module, the status shown below will be displayed.

• DIO Type (NPN/PNP Specification) Status LED



Expanded I/O2



Expanded I/O3

Name	Display Color	Status	Description
RUN	Green	Illuminated	It illuminates after initializing is complete. In the normal operation.
ERR	Orange	Illuminated	PIO power supply (24V DC) voltage drop error

• DeviceNet Status LED

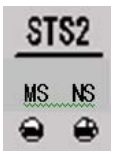

Expanded I/O2

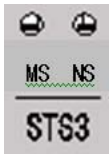

Expanded I/O3

Name	Display Color	Status	Description
NS	Green	Illuminated	Online
		Flashing	Online (No connection established)
	Orange	Illuminated	Error
		Flashing	One or more connection(s) in timeout
	Green/Orange	Flashing by turns	In self-diagnosis process
MS	Green	Illuminated	In normal operation
		Flashing	There is no configuration information. Or it is imperfect.
	Orange	Illuminated	Malfunction (recovery impossible)
		Flashing	Malfunction (recovery possible)
	Green/Orange	Flashing by turns	In self-diagnosis process

• CC-Link Status LED



Expanded I/O2



Expanded I/O3

Name	Display Color	Status	Description
ERR	Orange	Illuminated	An error occurred (CRC error / Station number setting error / Baud rate setting error)
		Flashing	Value has changed from those of station number and baud rate setting at reset release
RUN	Green	Illuminated	Refresh & polling received in normal condition after joining to network. Or refresh received in normal condition

• PROFIBUS-DP Status LED

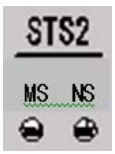

Expanded I/O2

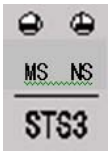

Expanded I/O3

Name	Display Color	Status	Description
NS	Green	Illuminated	Online
		Flashing	Online (cleared)
	Orange	Illuminated	An error occurred (Parameterizing error or PROFIBUS configuration error)
MS	Green	Illuminated	Initializing complete
		Flashing	Initializing complete (with diagnosis event)
	Orange	Illuminated	An error occurred (exceptional error)

• EtherNet/IP Status LED

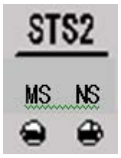

Expanded I/O2

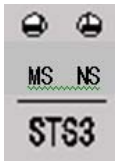

Expanded I/O3

Name	Display Color	Status	Description
NS	Green	Illuminated	Online (one or more connection(s) established)
		Flashing	Online (connection unestablished)
	Orange	Illuminated	IP address duplicated. Critical error
		Flashing	One or more connection(s) in timeout
	Green/Orange	OFF	Power OFF. IP address unset
MS	Green	Illuminated	In operational condition and under control of scanner (master)
		Flashing	Construction information setting incomplete Or scanner (master) in idle condition
	Orange	Illuminated	Critical malfunction (exceptional condition or critical error)
		Flashing	Light malfunction possible to recover
	Green/Orange	OFF	Power OFF

• Expanded I/O Status LED

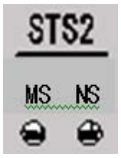

Expanded I/O2

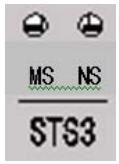

Expanded I/O3

Name	Display Color	Status	Description
RUN	Green	Illuminated	Serial communication (Sent or received)

13) Standard I/O Service Power Supply Connector

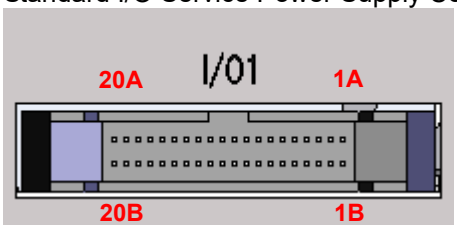

It is a general-purposed input and output connector to connect peripheral devices.
It is a flat connector with 40 pins. It is available for DIO connection of 16 points of general-purposed input and 16 points of general-purposed output.
With 16) Service Power Switch, the power can be supplied externally as the I/O power supply and internally as the I/O circuit power supply.

14) System I/O Connector ⋯ [Refer to 2.3.2]

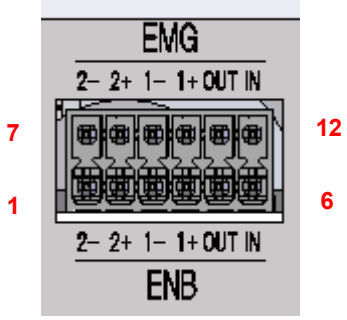

It is a connector with two contacts of emergency stop input and two contacts of enable input.

Pin No.	Signal Name	Description
1	ENBS2-	Enable Contact Output 2
2	ENBS2+	Enable Contact Output 2
3	ENBS1-	Enable Contact Output 1
4	ENBS1+	Enable Contact Output 1
5	ENBOUT	Enable 24V Output
6	ENBIN	Enable Input
7	EMGS2-	Emergency Stop Contact Output 2
8	EMGS2+	Emergency Stop Contact Output 2
9	EMGS1-	Emergency Stop Contact Output 1
10	EMGS1+	Emergency Stop Contact Output 1
11	EMGOUT	Emergency Stop 24V Output
12	EMGIN	Emergency Stop Input

15) Motor Power Supply Connector
It is a motor power input and output connector (MPO/MPI) for the external drive cutoff.

◎ Pulse Motor Type

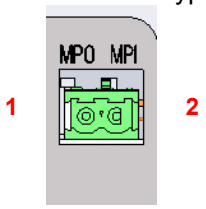

Pin No.	Signal Name	Description
1	MPO	Motor drive power output
2	MPI	Motor drive power input

◎ AC Servo Motor Type

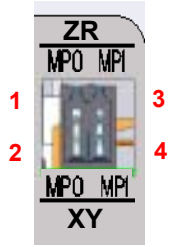

Pin No.	Signal Name	Description
1	MPO	Z-axis, R-axis motor drive power output
2	MPO	X-axis, Y-axis motor drive power output
3	MPI	Z-axis, R-axis motor drive power input
4	MPI	X-axis, Y-axis motor drive powerintput

16) Service Power Switch

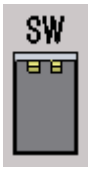

By turning over this switch, power supply of 24V DC + 1A is available for purpose of external I/O or sensors.

* Turn over the switch while the main power is OFF.

No.	Status	Description
1	OFF	Service power output is OFF
	ON	Service power output is ON
2	OFF	Normal mode (always keep it OFF)

19) FG Terminal
This screw terminal is used to connect FG of the enclosure to ground.

About Coordinate System

The coordinate system of the coordinate system definition unit consists of four coordinates (X-axis, Y-axis, Z-axis and R-axis) at the maximum.
The coordinate value on the home of each axis is 0mm of the position data.
The position from the home is the position data for each axis.

For TTA, there are three types of coordinate systems in addition to the coordinate system defined for each axis (each axis system), which are base coordinate system, work coordinate system and tool coordinate system.
(Note) To use coordinate systems other than the each axis system, it is necessary to activate the features for work and tool coordinate systems. For details, refer to “Work and Tool Coordinate Systems for Liner Axis” in “Chapter 7 Appendix”.

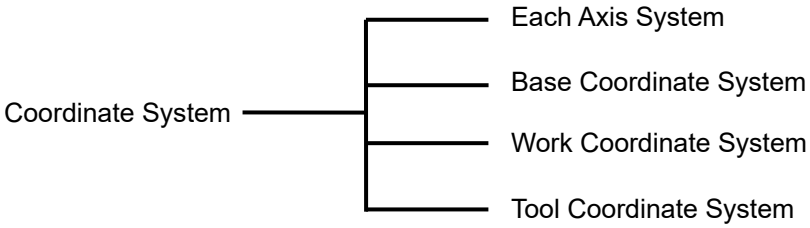

1. Each Axis System

Each axis system is the coordinate system specific for each linear axis.
In below, shows each axis system in four-axis type TTA for example.

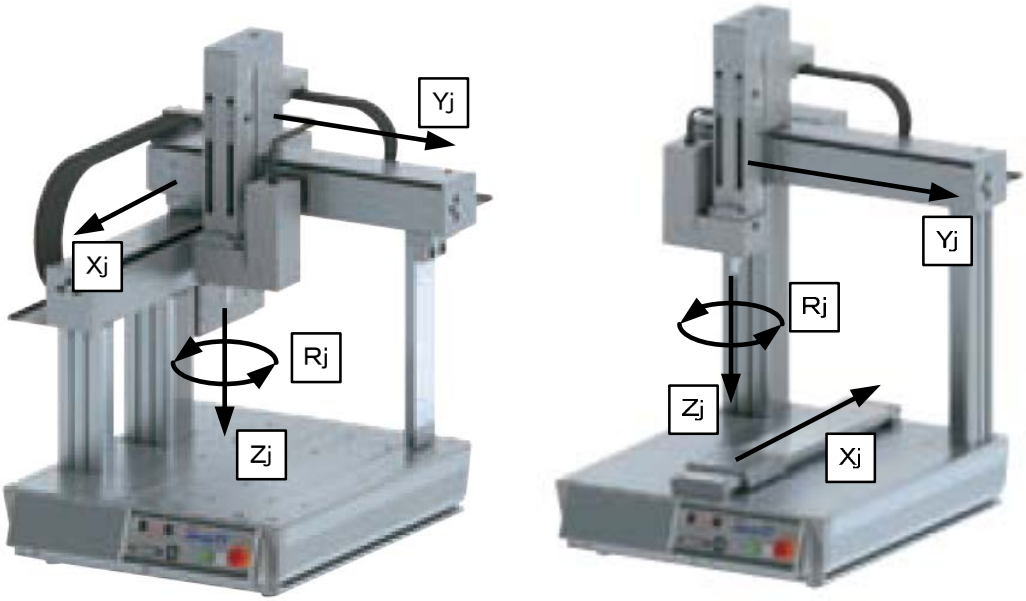

Figure : Example for Each Axis System in Four-Axis Type TTA (XYZ Home Standard Specification) (Left:TTA-C4 / Right:TTA-A4)

2. Base Coordinate System

It is the coordinate system to indicate the position of the datum point for tool installation against the work piece mount face. Work Coordinate System No. 0 (work coordinate system offset 0) = Base Coordinate System. X axis of Base Coordinate System is described as Xb, Y axis as Yb, Z axis as Zb and R axis as Rb.

(Example)　TTA-C4　(XYZ Home Standard Specification)

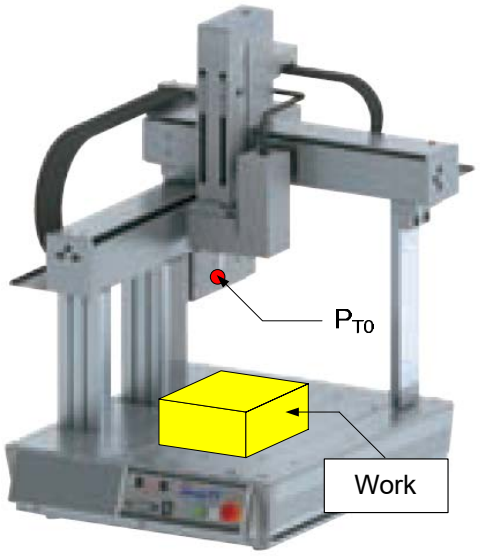

The base coordinate system can be defined as shown below.

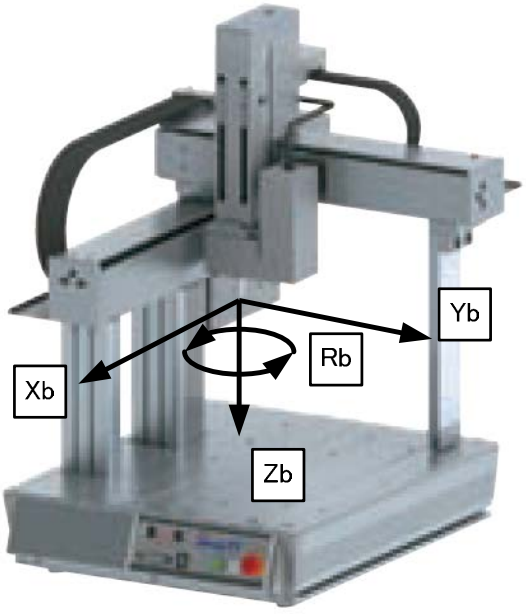

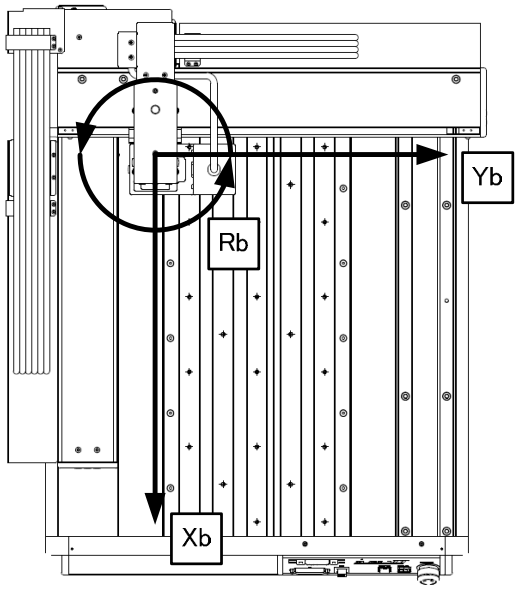

Also, when a work piece is mounted on an axis of either X, Y or Z-axis, the positive side of the base coordinate system is the opposite direction of the operation direction of the physical axis. For instance, in below explains for when a work piece is mounted on the X-axis in TTA-A4 (XYZ Home Standard Specification).
In this case, if moving the X-axis in the positive direction of each axis system, the tool attachment datum point seems to move in opposite direction to the motion if viewed from the work piece.

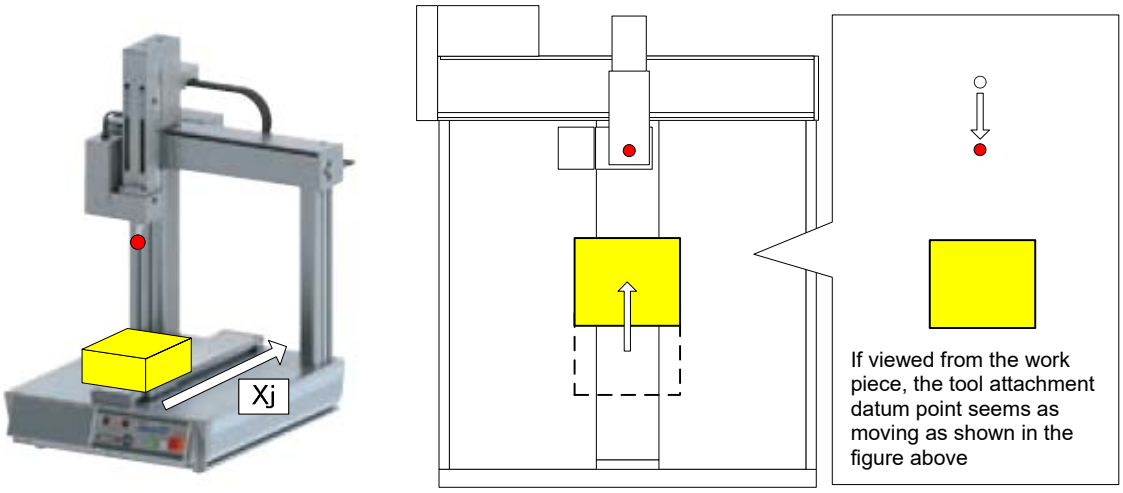

Therefore, the base coordinate system is shown as the figure below.

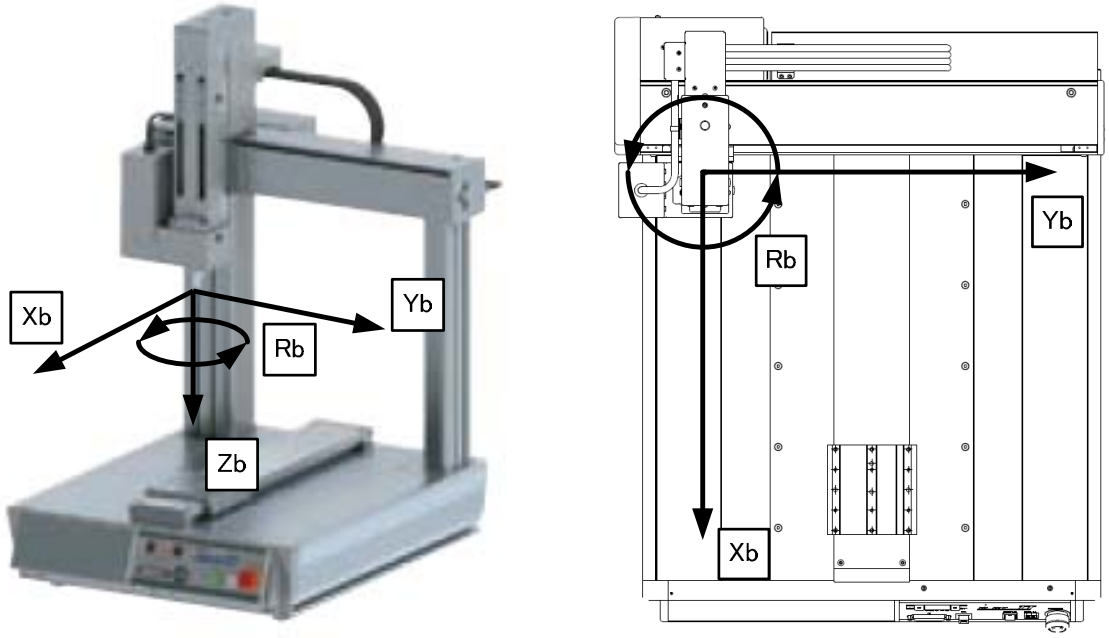

In below, shows the definition related to the home of the base coordinate system and the direction of coordinates.

Home	:	The position of the tool attachment datum point under condition that each axis system coordinates for all the unit constructing axes = 0
Positive direction of coordinate	:	The direction that the tool attachment datum point moves to the work piece mount face when each axis in the each axis system is moved in the positive direction

3. Work Coordinate System

It is the 32 kinds of coordinate systems defined by the offset of each axis against the base coordinate system.
Work Coordinate System No. 0 is reserved as Base Coordinate System (= Work Coordinate System Offset = 0) by the system.

Set the offset of each axis as described below.

・X, Y, Z Offset
Distance from the base coordinate system home to the work coordinate system home along Xb, Yb and Zb directions
・R Offset
Amount of work coordinate system rotation when base coordinate system taken as the datum

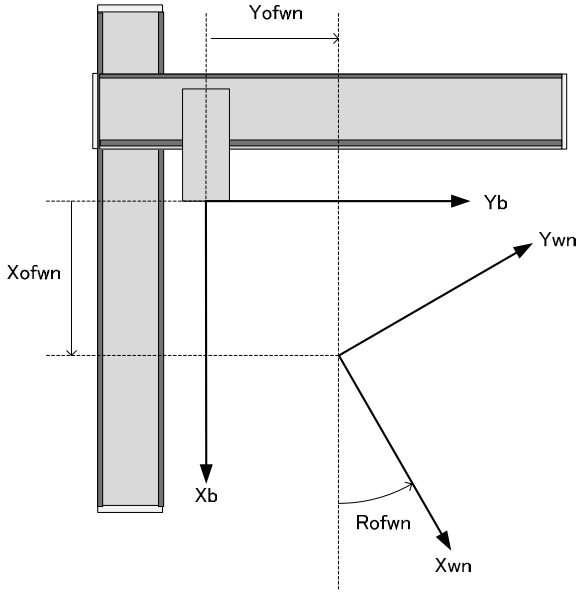

Also, the direction of the coordinate system rotation (positive direction of R offset) is defined as described below by the axis structure of the coordinate system definition unit.

・When no R-axis in constructing axes ・・・・・・・ Rotating Direction from Xb positive direction to Yb positive direction
・When there is R-axis in constructing axes ・・・ Rb + Direction

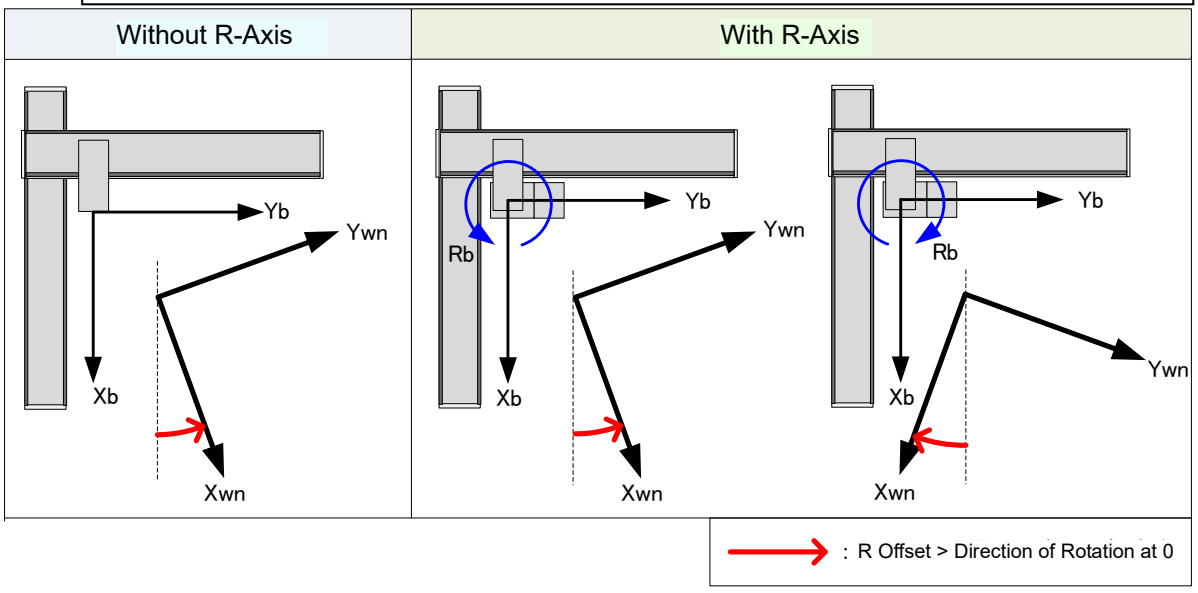

4. Tool Coordinate System

It is the 128 kinds of coordinate systems defined by the too (such as hand) dimensions (offset) of that attached on the tool attached position. Work Coordinate System No. 0 is reserved as offset = 0 of Tool Coordinates by the system.

Select the defined tool coordinate system number, and it is used as the destination point at positioning of the tool tip as well as the tool attached position.

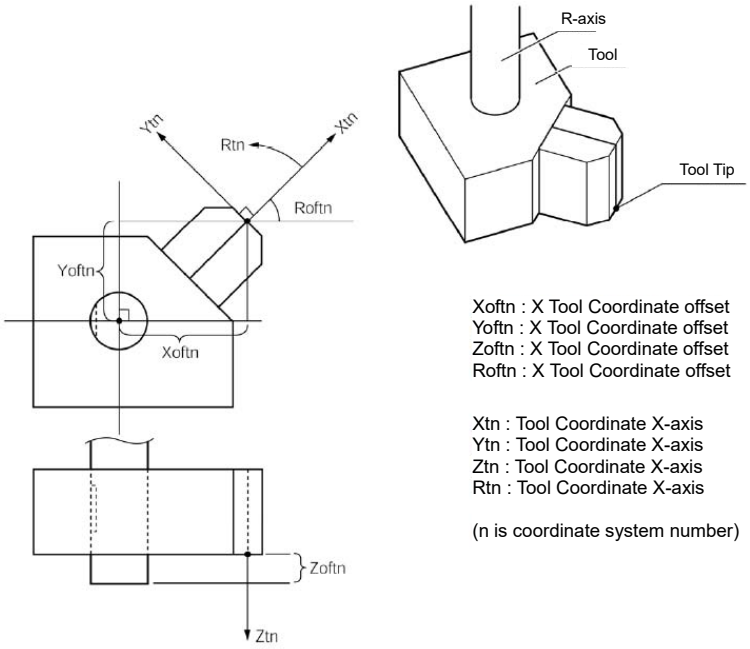

Xoftn : X Tool Coordinate offset
Yoftn : X Tool Coordinate offset
Zoftn : X Tool Coordinate offset
Roftn : X Tool Coordinate offset

Xtn : Tool Coordinate X-axis
Ytn : Tool Coordinate X-axis
Ztn : Tool Coordinate X-axis
Rtn : Tool Coordinate X-axis

(n is coordinate system number)

Select the defined Tool Coordinate System and operate the R axis with JOG operation, and such movement as shown in the figure below can be performed.

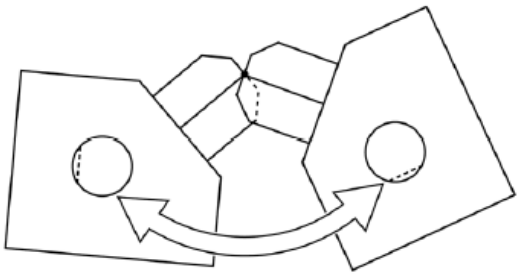

● Regarding directions of X and Y axes (Xtn and Ytn) in tool coordinate system
With R-Axis : Varies relying on coordinates of R-axis
Without R-Axis : Always fixed, the directions depends on R offset of tool coordinate system

Chapter 1 Specifications Check

1.1 Product Check

This product is comprised of the following parts if it is of standard configuration.
See the component list for the details of the enclosed components. If you find any fault in the contained model or any missing parts, contact us or our distributor.

1.1.1 Parts

No.	Part Name	Model	Quantity	Remarks
1	Robot Main Unit (with built-in controller)	Refer to “How to read the model plate”, “How to read the model”.	1	
Accessories				
2	Power Supply Plug	AP-400-C	1	Enclosed in PU
3	I/O Flat Cable	CB-PAC-PIO020	1 to 3	Length depends on indication of I/O cable length
4	System I/O Connector	DFMC1.5/6-ST-3.5 (Supplier : Phoenix Contact)	1	
5	Motor Power Connector For the AC Servo Motor Type	B2L 3.50/04/180 SN OR BX (Supplier : Weidmüller)	1	
	Motor Power Connector For the Pulse Motor Type	FKIC2.5HC/2-ST-5.08 (Supplier : Phoenix Contact)	1	
6	CC-Link Connector	MSTB2.5/5-STF-5.08AU (Supplier : Phoenix Contact)	1 or 2	Enclosed in CC Enclosed with one unit each of terminal resistors (130Ω 1/2W and 110Ω 1/2W)
7	DeviceNet Connector	MSTB2.5/5-STF-5.08AUM (Supplier : Phoenix Contact)	1 or 2	Enclosed in DV
8	Dummy Plug	DP-2	1	Enclosed in global specification TTA-A□G and TTA-C□G
9	Power Cable For the AC100V		1	Enclosed in 100V AC type
	Power Cable For the AC200V		1	Enclosed in 200V AC type
10	First Step Guide		1	
11	Instruction Manual (DVD)		1	
12	Safety Guide		1	

1.1.2 Instruction Manuals Related to This Product, which are Contained in the Instruction Manual (DVD).

No.	Name	Manual No.
1	Instruction Manual	ME0320
2	PC Software IA-101-X-MW/IA-101-X-USBMW Instruction Manual	ME0154
3	Touch Panel Teaching TB-02 Instruction Manual	ME0355
4	Touch Panel Teaching TB-01, TB-01D, TB-01DR Instruction Manual	ME0325
5	Teaching Pendant SEL-T/TD/TG Instruction Manual (Note 1)	ME0183
6	DeviceNet Instruction Manual	ME0124
7	CC-Link Instruction Manual	ME0123
8	PROFIBUS-DP Instruction Manual	ME0153
9	EtherNet/IP Instruction Manual	ME0308

Note 1 Applicable in Ver. V1.16 and later with hardware revision “2”

1.1.3 How to Read the Model Plate



MODEL : Including information such as stroke of each axis, options, extension slots
Stroke of each axis is to be described on KCs model label
WEIGHT : Product Weight
PAYLOAD : Transportable weight
S/N : Serial number
DATE : Delivery Date
INPUT : Power supply type
Name of manufacturer, address, country and CE mark are to be printed

1.1.4 How to Read the Model

TTA – A3 – WA – 30 HS – 30 HS – 15 BHSNM – 36L – ML – NP – DV – EP – 2 – 1 – H1 - **

<Series Name>

<Type>
* 1 Refer to type of next page

<Encoder Type>
WA : Battery-less Absolute

<X-Axis Stroke>
20: 200mm
30: 300mm
40: 400mm
50: 500mm

<X-Axis Option>
NM: Reversed-home specification

<Y-Axis Stroke>
20: 200mm (Work Moving Type)
30: 300mm (Work Moving Type)
40: 400mm (Work Moving Type)
50: 500mm (Work Moving Type)
15: 150mm (Work Fixing Type)
25: 250mm (Work Fixing Type)
35: 350mm (Work Fixing Type)
45: 450mm (Work Fixing Type)

<Y-Axis Option>
NM: Reversed-home specification

<Z-Axis Stroke>
10: 100mm
15: 150mm

<Z-Axis Option>
B: Brake (Nomal)
CO: With Cover (Dedicated for 4-axis specification)
NM: Reversed-home specification

<R-Axis Stroke>
18 : ±180deg (Battery-less Absolute Type)
18L: ±180deg (Incremental Type)
36L: ±360deg (With Home limit switch)

<R-Axis Option>
ML: Motor left reversed (Standard)
MR: Motor right reversed

<Standard Slot>
NP:NPN type
PN:PNP type

<Extension Slot 1>
E: Not use
NP:Extension I/O board (NPN type)
PN:Extension I/O board (PNP type)
DV: DeviceNet connection board
CC:CC-Link connection board
PR:PROFIBUS-DP connection board
EP: EtherNet/IP connection board (Note 2)
EC: EtherCAT connection board (Note 4)
IA: IA-NET connection board (Note 5)
SE1: RS232C connection board
SE2: RS485 connection board

<Extension Slot 2>
E: Not use
NP: Extension I/O board (NPN type)
PN: Extension I/O board (PNP type)
DV: DeviceNet connection board
CC: CC-Link connection board
PR: PROFIBUS-DP connection board
EP: EtherNetI/P connection board (Note 2)
EC: EtherCAT connection board (Note 4)
IA: IA-NET connection board (Note 5)
SE1: RS232C connection board
SE2: RS485 connection board

<I/O Cable Length>
0: None, 2: 2m
3: 3m, 5: 5m

<Power Supply Cable Specifications>
PU: Only with plug on main unit side
1: Power supply cable for 100V AC (2m)
(with 3-pin plug on one end)
2: Power supply cable for 200V AC (2m)
(Ring tongue terminal on one side)

<Option>
H1: H2: F1: F2: Y-axis mount position change — Refer to next page
FT4: Main-unit bracket-equipped type (with 4 pieces of brackets)
FT6: Main-unit bracket-equipped type (with 6 pieces of brackets)
AP: Support added for 2020 type
OS: Detachable operation unit type
SLT0: Side slot 180mm
SLT: Side slot for each stroke
PTH: Side plate (with hole)
PTN: Side plate (With no hole)
FZ: ZR-axis mounting position 64.5mm forward
* 2: Refer in the next page for model code for additional switch

Identification for IAI use only (Note 1)

Note 1 It may be displayed for IAI use. (It is not a code to show the model type.)
Note 2 2 pieces of EtherNet/IP cannot be selected to the extension I/O slot.
If there are two extension I/O slots, Extension I/O Slot 2 can only be selected.
Note 3 The difference between each model is only the strokes of X/Y axes and Z-axis.
The driving system is constructed with the same motor.
Note 4 Two units of EtherCAT can be mounted on the extension I/O slot at the maximum.
EtherCAT can be mounted on either of the extension I/O slots (when only one unit) or on both of them.
Note 5 Only one unit of IA-NT can be mounted on either of the extension I/O slots.

*1 Type

A2	:	Pulse motor, (Work moving) 2-axis
A2	:	Pulse motor, (Work moving) 2-axis, Global specification
A3	:	Pulse motor, (Work moving) 3-axis
A3	:	Pulse motor, (Work moving) 3-axis、Global specification
A4	:	Pulse motor, (Work moving) 4-axis
A4G	:	Pulse motor, (Work moving) 4-axis, Global specification
C2	:	Pulse motor, (Work fixing) 2-axis
C2G	:	Pulse motor, (Work fixing) 2-axis, Global specification
C3	:	Pulse motor, (Work fixing) 3-axis
C3G	:	Pulse motor, (Work fixing) 3-axis, Global specification
C4	:	Pulse motor, (Work fixing) 4-axis
C4G	:	Pulse motor, (Work fixing) 4-axis, Global specification
A2SL	:	Servo motor, (Work moving) 2-axis, Low lead specification
A2SLG	:	Servo motor, (Work moving) 2-axis, Low lead global specification
A2SH	:	Servo motor, (Work moving) 2-axis, High lead specification
A2SHG	:	Servo motor, (Work moving) 2-axis, High lead global specification
A3SL	:	Servo motor, (Work moving) 3-axis, Low lead specification
A3SLG	:	Servo motor, (Work moving) 3-axis, Low lead global specification
A3SH	:	Servo motor, (Work moving) 3-axis, High lead specification
A3SHG	:	Servo motor, (Work moving) 3-axis, High lead global specification
A4SL	:	Servo motor, (Work moving) 4-axis, Low lead specification
A4SLG	:	Servo motor, (Work moving) 4-axis, Low lead global specification
A4SH	:	Servo motor, (Work moving) 4-axis, High lead specification
A4SHG	:	Servo motor, (Work moving) 4-axis, High lead global specification
C2SL	:	Servo motor, (Work fixing) 2-axis, Low lead specification
C2SLG	:	Servo motor, (Work fixing) 2-axis, Low lead global specification
C2SH	:	Servo motor, (Work fixing) 2-axis, High lead specification
C2SHG	:	Servo motor, (Work fixing) 2-axis, High lead global specification
C3SL	:	Servo motor, (Work fixing) 3-axis, Low lead specification
C3SLG	:	Servo motor, (Work fixing) 3-axis, Low lead global specification
C3SH	:	Servo motor, (Work fixing) 3-axis, High lead specification
C3SHG	:	Servo motor, (Work fixing) 3-axis, High lead global specification
C4SL	:	Servo motor, (Work fixing) 4-axis, Low lead specification
C4SLG	:	Servo motor, (Work fixing) 4-axis, Low lead global specification
C4SH	:	Servo motor, (Work fixing) 4-axis, High lead specification
C4SHG	:	Servo motor, (Work fixing) -axis, High lead global specification

*2 Additional Switches

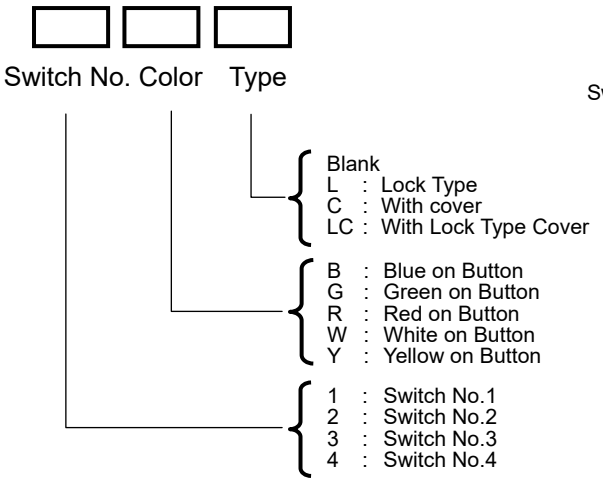

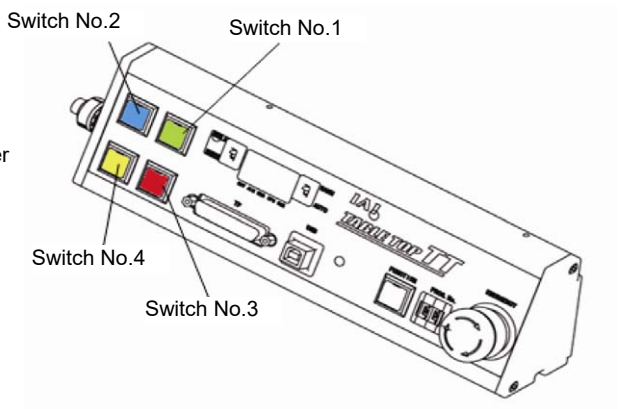

Example : When Switch No. 1, Blue on Switch and Lock Type → 1BL
* There are patterns as shown below for the selectable number of switches
1) For one : Switch No.1
2) For two : Switch No.1, 2
3) For three : Switch No.1 to 3
4) For four : Switch No.1 to 4

1.1.5 Model Codes for Option of Y-axis Mount Position Change

	Standard	Higher in +50mm from standard	Higher in +100mm from standard
Model code for changed in Y-axis mounting position in height	-	H1	H2

	Standard	Forward in +90mm from standard	Forward in +180mm from standard
Model code for changed in Y-axis mounting position in back and forth direction	-	F1	F2

Y-axis mounting position in height * The figure below shows TTA in view from front

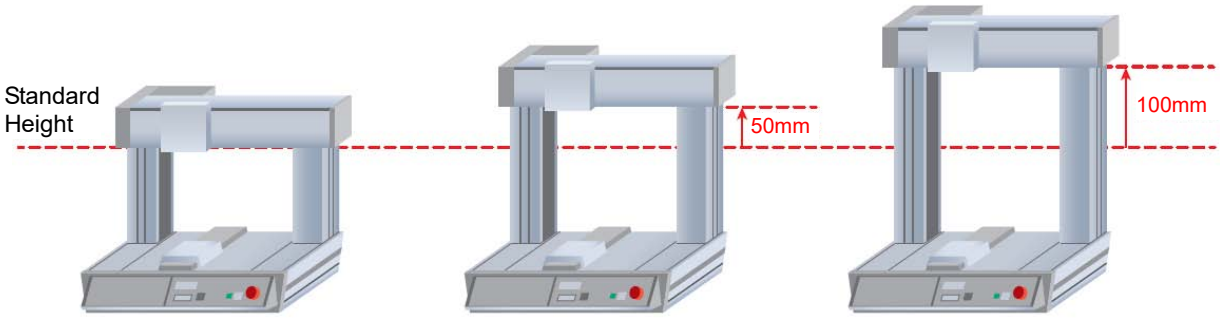

(Standard) H1 (Standard+50mm) H2 (Standard+100mm)

Y-axis position in back and forth direction * The figure below shows TTA in view from top

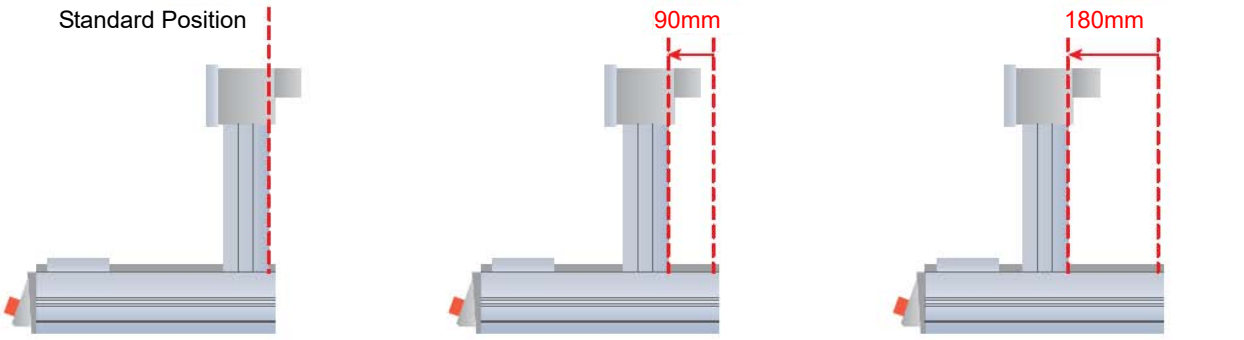

(Standard) F1 (Forward in 90mm from standard) F2 (Forward in 180mm from standard)

1.1.6 Model Code for ZR Axis Front-Back Direction Position Change Option

	Standard	64.5mm forward to standard
ZR Axis Front-Back Direction Position Change Model Code	-	FZ

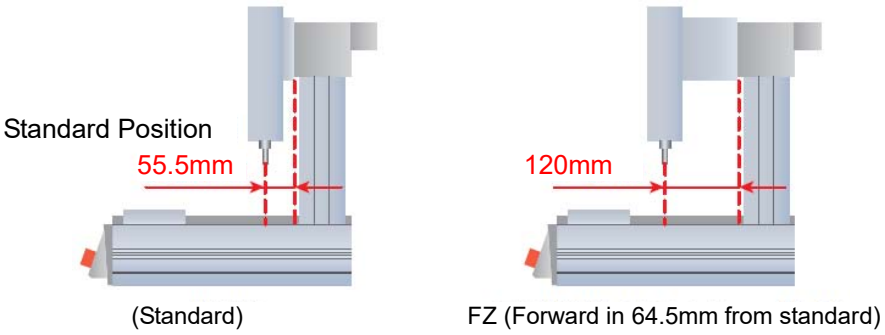

(Standard)　　FZ (Forward in 64.5mm from standard)

1.2 Mechanical Specifications

1.2.1 Speed

[1] Work Moving Type Pulse Motor Specifications

Restriction on Speed Unit [mm/s]

Model / Axis	2020	3030	4040	5050
	2020-10B/15B	3030-10B/15B	4040-10B/15B	5050-10B/15B
	2020-10B/15B-R1/R2	3030-10B/15B-R1/R2	4040-10B/15B-18L/36L	5050-10B/15B-18L/36L
X	800			
Y	800			
Z	400			
R	1000 [deg/sec]			

[2] Work Fixing Type Pulse Motor Specifications

Restriction on Speed Unit [mm/s]

Model / Axis	2015	3025	4035	5045
	2015-10B/15B	3025-10B/15B	4035-10B/15B	5045-10B/15B
	2015-10B/15B-R1/R2	3025-10B/15B-R1/R2	4040-10B/15B-18L/36L	5050-10B/15B-18L/36L
X	600	700	800	
Y	540	640	800	
Z	400			
R	1000 [deg/sec]			

[3] Work Moving Type Servo Motor Low Lead Specifications

Restriction on Speed Unit [mm/s]

Model / Axis	2020	3030	4040	5050
	2020-10B/15B	3030-10B/15B	4040-10B/15B	5050-10B/15B
	2020-10B/15B-R1/R2	3030-10B/15B-R1/R2	4040-10B/15B-18L/36L	5050-10B/15B-18L/36L
X	600			
Y	600			
Z	170			
R	1500 [deg/sec]			

[4] Work Moving Type Servo Motor High Lead specification

Restriction on Speed Unit [mm/s]

Model / Axis	2020			3030			4040		5050
	2020-10B/15B			3030-10B/15B			4040-10B/15B		5050-10B/15B
	2020-10B/15B-R1/R2			3030-10B/15B-R1/R2			4040-10B/15B-18L/36L		5050-10B/15B-18L/36L
X	1000			1200					
Y	2-axis type	3-axis type	4-axis type	2-axis type	3-axis type	4-axis type	2, 3-axis type	4-axis type	1200
	1000	800	700	1200	1000	900	1200	1050	
Z	400								
R	1500 [deg/sec]								

[5] Work Fixing Type Servo Motor Low Lead Specifications

Restriction on Speed Unit [mm/s]

Model / Axis	2020	3030	4040	5050
	2020-10B/15B	3030-10B/15B	4040-10B/15B	5050-10B/15B
	2020-10B/15B-R1/R2	3030-10B/15B-R1/R2	4040-10B/15B-18L/36L	5050-10B/15B-18L/36L
X	600			
Y	600			
Z	170			
R	1500 [deg/sec]			

[6] Work Fixing Type Servo Motor High Lead specification

Restriction on Speed Unit [mm/s]

Model / Axis	2020		3030		4040		5050
	2020-10B/15B		3030-10B/15B		4040-10B/15B		5050-10B/15B
	2020-10B/15B-R1/R2		3030-10B/15B-R1/R2		4040-10B/15B-18L/36L		5050-10B/15B-18L/36L
X	2-axis type	3, 4-axis type	2-axis type	3,4-axis type	2-axis type	3, 4-axis type	1000
	700	600	900	750	1000	850	
Y	600		800		1000		1000
Z	400						
xR	1500 [deg/sec]						

1.2.2 Max. Speed, Max. Acceleration Speed and Transportable Mass

[1] Work Moving Type Pulse Motor Specifications

When the transported weight is low, the acceleration/deceleration and speed can be increased.

Transportable Mass Unit: [kg]

Axis	Max. Speed [mm/s] / Acceleration [G]	50 or less	100 or less	200 or less	300 or less	400 or less	500 or less	600 or less	700 or less	800 or less
X	0.4 or less	10								8
	0.3 or less	15						12	10	8
	0.2 or less	20				18	15	12	10	8
Y	0.4 or less	10								8
Z	0.2 or less	6	5	4	3		-			

> ⚠ Caution: Do not set speeds and accelerations/decelerations equal to or greater than the respective ratings. It may cause vibration, malfunction or shortened life. If any acceleration/deceleration equal to or greater than the rated acceleration/deceleration is set, a creep phenomenon or slipped coupling may occur.

[2] Work Fixing Type Pulse Motor Specifications

• 2-axis Type

Transportable Mass Unit: [kg]

Axis	Max. Speed [mm/s] / Acceleration [G]	50 or less	100 or less	200 or less	300 or less	400 or less	500 or less	600 or less	700 or less	800 or less
X	0.2 or less	10							8	
Y	0.2 or less	10								8

• 3, 4-axis Type

Transportable Mass Unit: [kg]

Axis	Max. Speed [mm/s] / Acceleration [G]	50 or less	100 or less	200 or less	300 or less	400 or less	500 or less	600 or less	700 or less	800 or less
X	0.2 or less	6					5		4	3
Y	0.2 or less	6								
Z	0.2 or less	6	5	4	3		-			

> ⚠ Caution: Do not set speeds and accelerations/decelerations equal to or greater than the respective ratings. It may cause vibration, malfunction or shortened life. If any acceleration/deceleration equal to or greater than the rated acceleration/deceleration is set, a creep phenomenon or slipped coupling may occur.

• R-axis Type Transportable Mass

Unit: [kg·m^2]

Axis	Angular Velocity [deg/s]	200 or less	300 or less	400 or less	500 or less	600 or less	700 or less	800 or less	900 or less	1000 or less
R	Allowable Load Moment of Inertia	0.01		0.008	0.006	0.005	0.004		0.003	

• R-axis Allowable Load Moment of Inertia and Angular Vlocity・Angular Acceleration/Deceleration

Allowable Load Moment of Inertia [kg·m^2]	Setting Angular Velocity [deg/sec]	Setting Acceleration/Deceleration [deg/sec^2]
0.010	100	1,000
0.010	200	1,000
0.010	300	1,000
0.008	400	1,778
0.006	500	2,778
0.005	600	4,000
0.004	700	5,444
0.004	800	7,111
0.003	900	9,000
0.003	1,000	11,111

[3] Work Moving Type Servo Motor Low Lead Specifications

When the transported weight is low, the acceleration/deceleration and speed can be increased.

Transportable Mass Unit: [kg]

Axis	Acceleration [G]				
	0.15 or less	0.2 or less	0.3 or less	0.4 or less	0.5 or less
X	30	17	10	6	3
Y	20	17	10	6	3
Z	15	12	9	-	-

[4] Work Moving Type Servo Motor High Lead Specification

When the transported weight is low, the acceleration/deceleration and speed can be increased.

Transportable Mass Unit: [kg]

Axis	Acceleration [G]						
	0.15 or less	0.2 or less	0.3 or less	0.4 or less	0.5 or less	0.6 or less	0.7 or less
X	15		8	5	3	1.8	1
Y	11		8	5	3	1.8	1
Z	7		5.5	4	3	-	-

[5] Work Fixing Type Servo Motor Low Lead Specifications

When the transported weight is low, the acceleration/deceleration and speed can be increased.

Transportable Mass Unit: [kg]

Axis	Acceleration [G]		
	0.15 or less	0.2 or less	0.3 or less
X	30	17	-
Y	20	15	10
Z	15	12	9

[6] Work Fixing Type Servo Motor High Lead Specifications

When the transported weight is low, the acceleration/deceleration and speed can be increased.

Transportable Mass Unit: [kg]

Axis	Acceleration [G]				
	0.15 or less	0.2 or less	0.3 or less	0.4 or less	0.5 or less
X	22	17	12	-	-
Y	12		10	-	-
Z	7		5.5	4	3

• R-axis Type Transportable Mass

Unit: [kg·m^2]

Axis	Angular Velocity [deg/s]	200 or less	300 or less	400 or less	500 or less	600 or less	700 or less	800 or less	900 or less	1000 or less
R	Allowable Load Moment of Inertia	0.01		0.008	0.006	0.005	0.004		0.003	

• R-axis Allowable Load Moment of Inertia and Angular Vlocity・Angular Acceleration/Deceleration

Allowable Load Moment of Inertia [kg·m^2]	Setting Angular Velocity [deg/sec]	Setting Acceleration/Deceleration [deg/sec^2]
0.005	500	1,000
0.004	700	2,000
0.003	1600	
0.002	1600	
0.001	1600	

1.2.3 Driving System and Position Detector

[1] Pulse Motor Standard Specifications

Axis	Motor Type	Lead [mm]	No. of Encoder Pulses	Ball Screw Type		
				Type	Diameter [mm]	Accuracy
X	□56 Stepping motor	24 or equivalent	800	Rolled	ϕ 12	C10
Y	□56 Stepping motor	24 or equivalent	800	Rolled	ϕ 12	C10
Z	□42 Stepping motor	12	800	Rolled	ϕ 10	C10
R	□42 Stepping motor		800			

[2] Pulse Motor High Resolution Specifications

Axis	Motor Type	Lead [mm]	No. of Encoder Pulses	Ball Screw Type		
				Type	Diameter [mm]	Accuracy
X	□56 Stepping motor	24 or equivalent	8192	Rolled	ϕ 12	C10
Y	□56 Stepping motor	24 or equivalent	8192	Rolled	ϕ 12	C10
Z	□42 Stepping motor	12	8192	Rolled	ϕ 10	C10
R	□42 Stepping motor		8192			

[3] Servo Motor Low Lead Specifications

Axis	Motor Type	Watt age	Lead [mm]	No. of Encoder Pulses	Ball Screw Type		
					Type	Diameter [mm]	Accuracy
X	□56 AC servo motor	45W	8	32768	Rolled	ϕ 12	C5 or equivalent
Y	□56 AC servo motor	45W	8	32768	Rolled	ϕ 12	C5 or equivalent
Z	□42 AC servo motor	40W	3	32768	Rolled	ϕ 10	C5 or equivalent
R	□56 AC servo motor	40W					

[4] Servo Motor High Lead Specifications

Axis	Motor Type	Watt age	Lead [mm]	No. of Encoder Pulses	Ball Screw Type		
					Type	Diameter [mm]	Accuracy
X	□56 AC servo motor	45W	16	32768	Rolled	ϕ 12	C5 or equivalent
Y	□56 AC servo motor	45W	16	32768	Rolled	ϕ 12	C5 or equivalent
Z	□42 AC servo motor	40W	6	32768	Rolled	ϕ 10	C5 or equivalent
R	□56 AC servo motor	40W					

1.2.4 Positioning Repeatability, Lost Motion (Note 1)

[1] Pulse Motor Standard Specifications

Axis	Positioning Repeatability [mm] (Note 2)	Lost Motion [mm]
X	±0.02	0.1 or less
Y	±0.02	0.1 or less
Z	±0.02	0.1 or less
R	±0.015 [deg]	0.06deg or less

[2] Pulse Motor High Resolution Specifications

Axis	Positioning Repeatability [mm] (Note 2)	Lost Motion [mm]
X	±0.01	0.05 or less
Y	±0.01	0.05 or less
Z	±0.01	0.05 or less
R	±0.01 [deg]	0.06deg or less

[3] Servo Motor Low Lead Specifications

Axis	Positioning Repeatability [mm] (Note 2)		Lost Motion [mm]	
	Battery-Less Absolute Encoder	Absolute Encoder	Battery-Less Absolute Encoder	Absolute Encoder
X	±0.005		0.025 or less	0.020 or less
Y	±0.005		0.025 or less	0.020 or less
Z	±0.005		0.020 or less	
R	±0.015 [deg]	±0.010 [deg]	0.06deg or less	0.03deg or less

[4] Servo Motor High Lead Specifications

Axis	Positioning Repeatability [mm] (Note 2)		Lost Motion [mm]	
	Battery-Less Absolute Encoder	Absolute Encoder	Battery-Less Absolute Encoder	Absolute Encoder
X	±0.005		0.040 or less	0.020 or less
Y	±0.005		0.040 or less	0.020 or less
Z	±0.005		0.020 or less	
R	±0.015 [deg]	±0.010 [deg]	0.06deg or less	0.03deg or less

Note 1 This is an option already attached when it is shipped out from the factory. It does not include the consideration of time-dependent change as it is used.

Note 2 It is applicable only when the temperature on the main body is in constant. It is not what guarantees the absolute precision.

1.2.5 Relation between Current Limit Value and Pressing Force

[1] Pulse Motor Specifications

• Z-Axis

Current Limit Value [%]	Pressing Force [N]
20	29
30	44
40	59
50	73
60	88
70	103

Fluctuation in Pressing Force: ±10%F.S

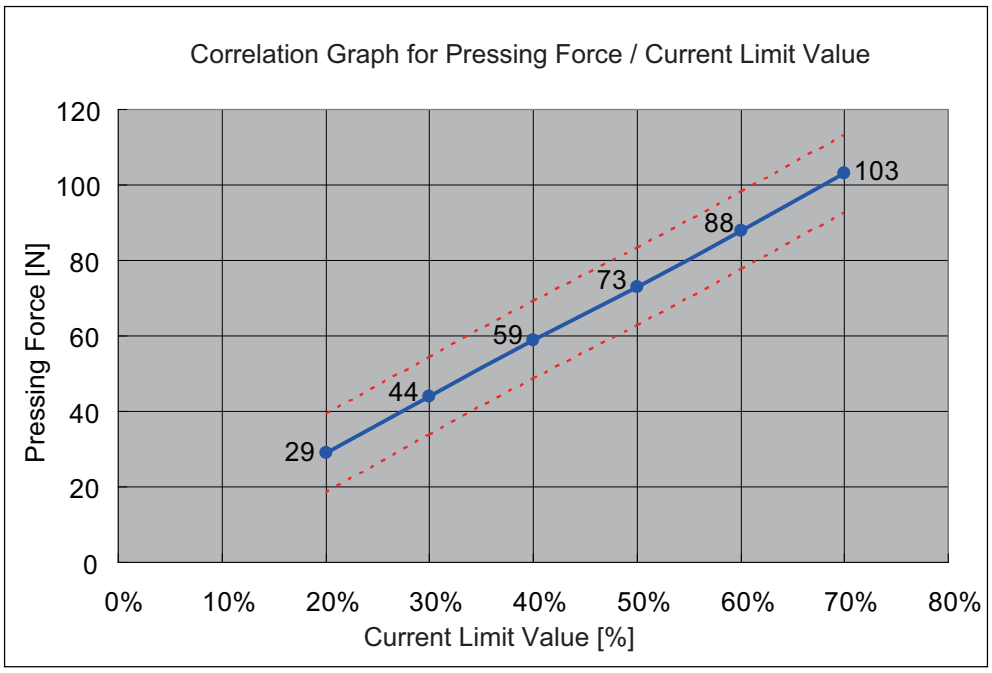

⚠ Caution: (1) The relation of the current limit value and the pressing force is a reference when assuming the speed is 20mm/s.
(2) There is a little variance in the actual pressing force. The variance of the pressing force becomes large when the current limit value is low.
(3) Use the product within the range in the graph for the current limit value. Pressing force will not be stable if used below 20%. There is even a case that it would not operate. An operation cannot be made also when it is beyond 70%. Doing so may cause degradation in the motor coil insulation by heat radiation, which results in shortening the product life.

• R-Axis

Current Limit Value [%]	Pressing Torque [N·m]
10	0.12
20	0.24
30	0.37
40	0.48
50	0.61
60	0.73
70	0.85

Fluctuation in Pressing Torque: ±10%F.S

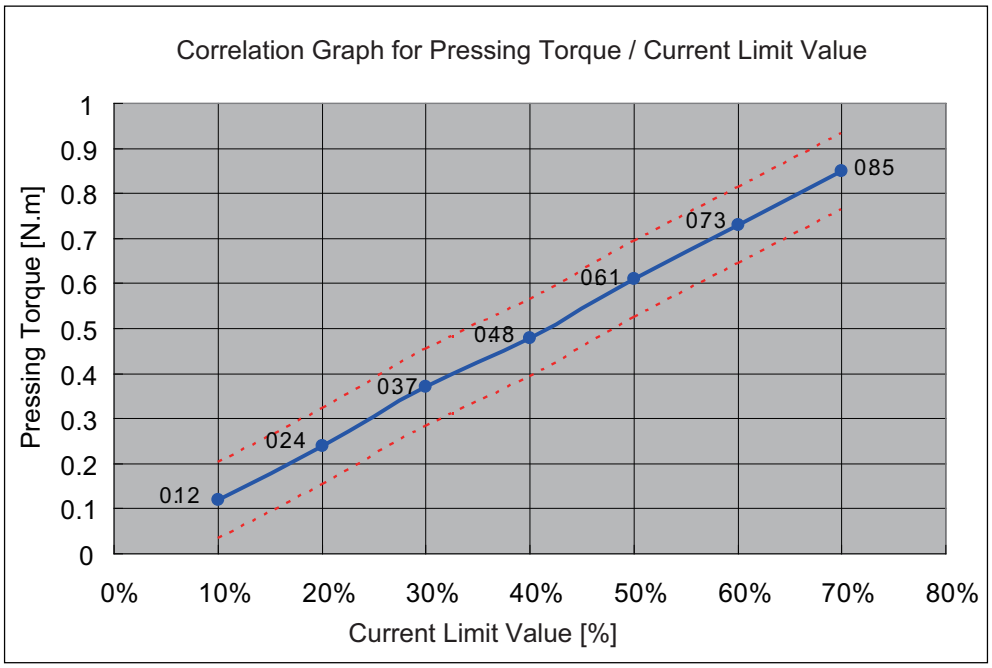

[2] Servo Motor Specifications

• Z-Axis

Current Limit Value [%]	Pressing Force [N]	
	Low Lead Specification	High Lead Specification
20	40	17
30	60	26
40	80	34
50	100	43
60	120	52
70	140	60

Fluctuation in Pressing Force: ±10%F.S

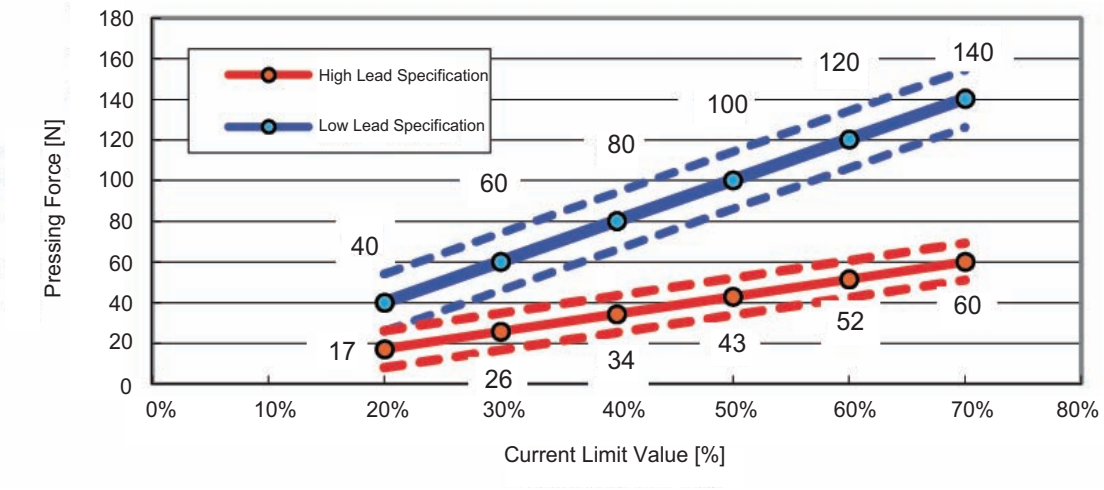

• R-Axis

Current Limit Value [%]	Pressing Torque [N·m]
10	0.08
20	0.15
30	0.23
40	0.30
50	0.38
60	0.46
70	0.53

Fluctuation in Pressing Torque: ±10%F.S

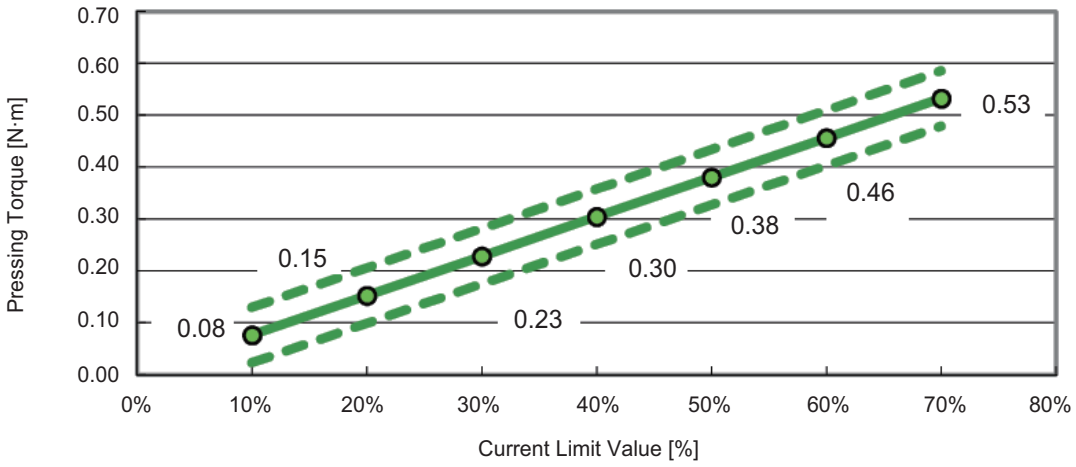

1.2.6 Allowable Moment for Actuator

[1] Work Moving Type Pulse Motor Specifications

• 2-Axis Type

Axis	Allowable Static Load Moment [N•m]			Allowable Dynamic Load Moment [N•m]			Overhang load length [L]
	Ma	Mb	Mc	Ma	Mb	Mc	
X	62.7	62.7	126.5	15.9	15.9	32.0	Ma direction: 190mm or less Mb or Mc direction : 240mm or less
Y	47.9	47.9	142.1	12.6	12.6	37.4	Ma direction: 170mm or less Mb or Mc direction: 210mm or less

• 3-Axis Type

Axis	Allowable Static Load Moment [N•m]			Allowable Dynamic Load Moment [N•m]			Overhang load length [L]
	Ma	Mb	Mc	Ma	Mb	Mc	
X	62.7	62.7	126.5	15.9	15.9	32.0	Ma direction: 190mm or less Mb or Mc direction: 240mm or less
Y	-	-	-	-	-	-	-
Z	35.0	35.0	74.0	9.7	9.7	20.5	Ma direction: 75mm or less Mb or Mc direction: 180mm or less

• 4-Axis Type

Axis	Allowable Static Load Moment [N•m]			Allowable Dynamic Load Moment [N•m]			Overhang load length [L]
	Ma	Mb	Mc	Ma	Mb	Mc	
X	62.7	62.7	126.5	15.9	15.9	32.0	Ma direction: 190mm or less Mb or Mc direction : 240mm or less
Y	-	-	-	-	-	-	-
Z	35.0	35.0	74.0	9.7	9.7	20.5	Ma direction: 75mm or less Mb or Mc direction: 180mm or less
R			-			-	Radius 100mm or less:

* Refer to “1.2.7 Ma Direction Moment Offset Datum Position and Each Axis Moment Direction” for the Ma direction moment offset datum position and the moment direction of each axis.
* It is the value assuming the rated life of the linear guide is 5,000km (fw: 1.5, remaining ratio 90%).
* Z and R-axes allowable moments Ma and Mb for the four-axis type should be the sum total of Z-axis and R-axis.

[2] Work Fixing Type Pulse Motor Specifications

• 2-Axis Type

Axis	Allowable Static Load Moment [N•m]			Allowable Dynamic Load Moment [N•m]			Overhang load length [L]
	Ma	Mb	Mc	Ma	Mb	Mc	
X	47.9	47.9	142.1	12.6	12.6	37.4	-
Y	47.9	47.9	142.1	12.6	12.6	37.4	Ma direction: 170mm or less Mb or Mc direction: 210mm or less

• 3-Axis Type

Axis	Allowable Static Load Moment [N•m]			Allowable Dynamic Load Moment [N•m]			Overhang load length [L]
	Ma	Mb	Mc	Ma	Mb	Mc	
X	47.9	47.9	142.1	12.6	12.6	37.4	-
Y	-	-	-	-	-	-	-
Z	35.0	35.0	74.0	9.7	9.7	20.5	Ma direction: 75mm or less Mb or Mc direction: 180mm or less

• 4-Axis Type

Axis	Allowable Static Load Moment [N•m]			Allowable Dynamic Load Moment [N•m]			Overhang load length [L]
	Ma	Mb	Mc	Ma	Mb	Mc	
X	47.9	47.9	142.1	12.6	12.6	37.4	Ma direction: 190mm or less Mb or Mc direction : 240mm or less
Y	-	-	-	-	-	-	-
Z	35.0	35.0	74.0	9.7	9.7	20.5	Ma direction: 75mm or less Mb or Mc direction: 180mm or less
R			-			-	Radius 100mm or less:

* Refer to “1.2.7 Ma Direction Moment Offset Datum Position and Each Axis Moment Direction” for the Ma direction moment offset datum position and the moment direction of each axis.
* It is the value assuming the rated life of the linear guide is 5,000km (fw: 1.5, remaining ratio 90%).
* Z and R-axes allowable moments Ma and Mb for the four-axis type should be the sum total of Z-axis and R-axis.

[3] Work Moving Type Servo Motor Specifications

• 2-Axis Type

Axis	Allowable Static Load Moment [N•m]			Allowable Dynamic Load Moment [N•m]			Overhang load length [L]
	Ma	Mb	Mc	Ma	Mb	Mc	
X	62.7	62.7	126.5	18.8	18.8	37.8	Ma direction: 190mm or less Mb or Mc direction: 240mm or less
Y	47.9	47.9	142.1	14.9	14.9	44.3	Ma direction: 170mm or less Mb or Mc direction: 210mm or less

• 3-Axis Type

Axis	Allowable Static Load Moment [N•m]			Allowable Dynamic Load Moment [N•m]			Overhang load length [L]
	Ma	Mb	Mc	Ma	Mb	Mc	
X	62.7	62.7	126.5	18.8	18.8	37.8	Ma direction: 190mm or less Mb or Mc direction: 240mm or less
Y	47.9	47.9	142.1	14.9	14.9	44.3	-
Z	35.0	35.0	74.0	11.5	11.5	24.3	Ma direction: 75mm or less Mb or Mc direction: 180mm or less

• 4-Axis Type

Axis	Allowable Static Load Moment [N•m]			Allowable Dynamic Load Moment [N•m]			Overhang load length [L]
	Ma	Mb	Mc	Ma	Mb	Mc	
X	62.7	62.7	126.5	18.8	18.8	37.8	Ma direction: 190mm or less Mb or Mc direction : 240mm or less
Y	47.9	47.9	142.1	14.9	14.9	44.3	-
Z	35.0	35.0	74.0	11.5	11.5	24.3	Ma direction: 75mm or less Mb or Mc direction: 180mm or less
R			-			-	Radius 100mm or less:

* Refer to “1.2.7 Ma Direction Moment Offset Datum Position and Each Axis Moment Direction” for the Ma direction moment offset datum position and the moment direction of each axis.
* It is the value assuming the rated life of the linear guide is 5,000km (fw: 1.5, remaining ratio 90%).
* Z and R-axes allowable moments Ma and Mb for the four-axis type should be the sum total of Z-axis and R-axis.

[4] Work Fixing Type Servo Motor Specifications

• 2-Axis Type

Axis	Allowable Static Load Moment [N•m]			Allowable Dynamic Load Moment [N•m]			Overhang load length [L]
	Ma	Mb	Mc	Ma	Mb	Mc	
X	47.9	47.9	142.1	14.9	14.9	44.3	-
Y	47.9	47.9	142.1	14.9	14.9	44.3	Ma direction: 170mm or less Mb or Mc direction: 210mm or less

• 3-Axis Type

Axis	Allowable Static Load Moment [N•m]			Allowable Dynamic Load Moment [N•m]			Overhang load length [L]
	Ma	Mb	Mc	Ma	Mb	Mc	
X	47.9	47.9	142.1	14.9	14.9	44.3	-
Y	47.9	47.9	142.1	14.9	14.9	44.3	-
Z	35.0	35.0	74.0	11.5	11.5	24.3	Ma direction: 75mm or less Mb or Mc direction: 180mm or less

• 4-Axis Type

Axis	Allowable Static Load Moment [N•m]			Allowable Dynamic Load Moment [N•m]			Overhang load length [L]
	Ma	Mb	Mc	Ma	Mb	Mc	
X	47.9	47.9	142.1	14.9	14.9	44.3	Ma direction: 190mm or less Mb or Mc direction : 240mm or less
Y	47.9	47.9	142.1	14.9	14.9	44.3	-
Z	35.0	35.0	74.0	11.5	11.5	24.3	Ma direction: 75mm or less Mb or Mc direction: 180mm or less
R			-			-	Radius 100mm or less:

* Refer to “1.2.7 Ma Direction Moment Offset Datum Position and Each Axis Moment Direction” for the Ma direction moment offset datum position and the moment direction of each axis.
* It is the value assuming the rated life of the linear guide is 5,000km (fw: 1.5, remaining ratio 90%).
* Z and R-axes allowable moments Ma and Mb for the four-axis type should be the sum total of Z-axis and R-axis.

1.2.7 Ma Direction Moment Offset Datum Position and the Moment Direction of Each Axis

• Work Moving Type

[Ma Direction Moment Offset Datum Position]

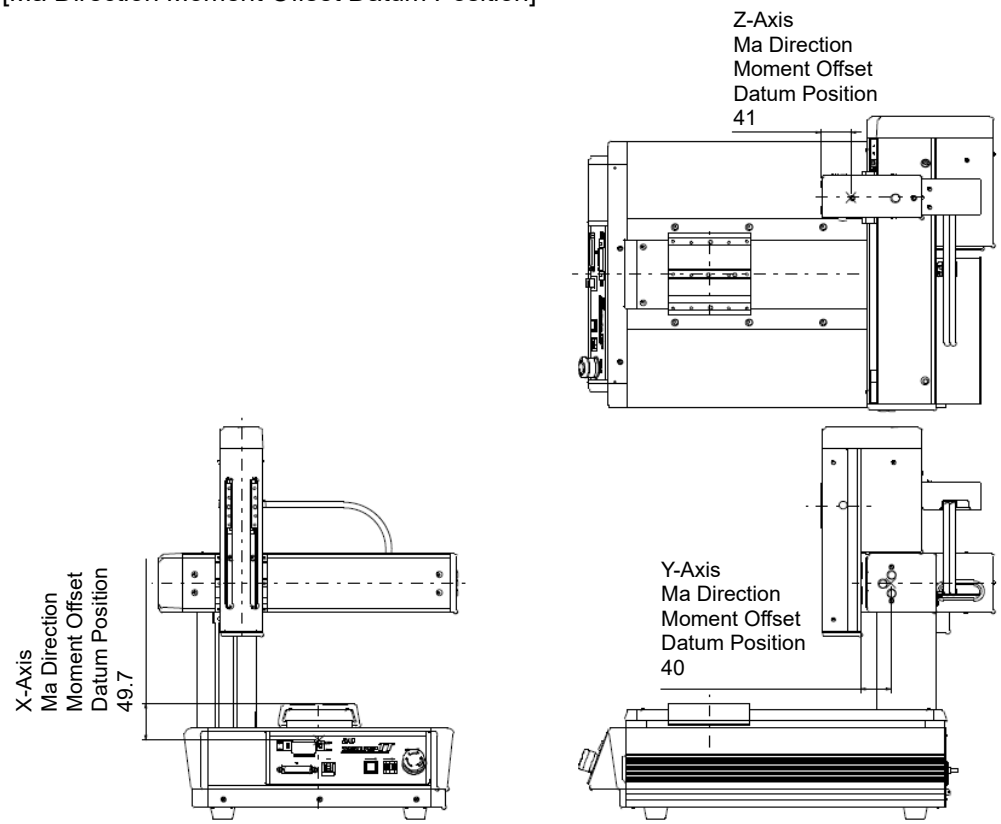

[Moment Direction of Each Axis]

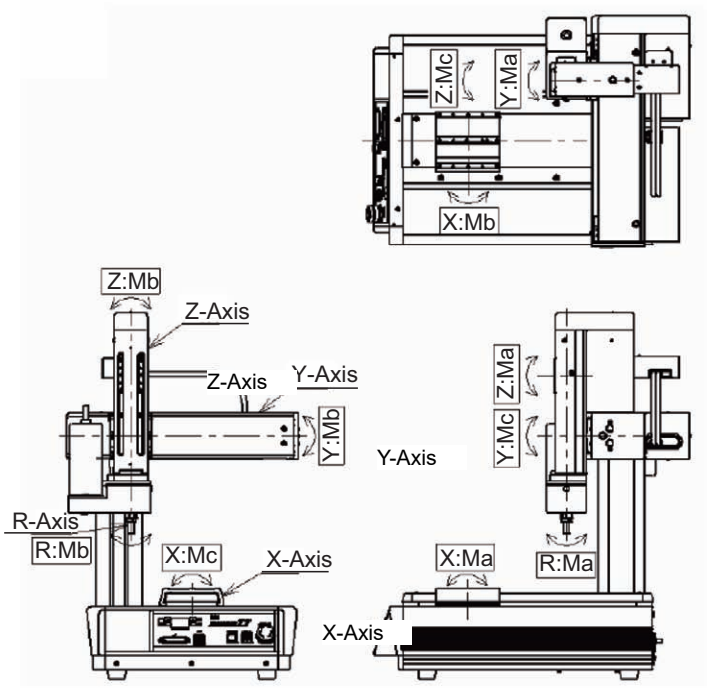

[Rotary direction for R-Axis]

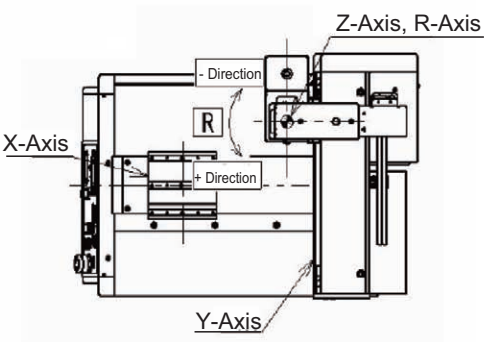

• Work Fixing Type

[Ma Direction Moment Offset Datum Position]

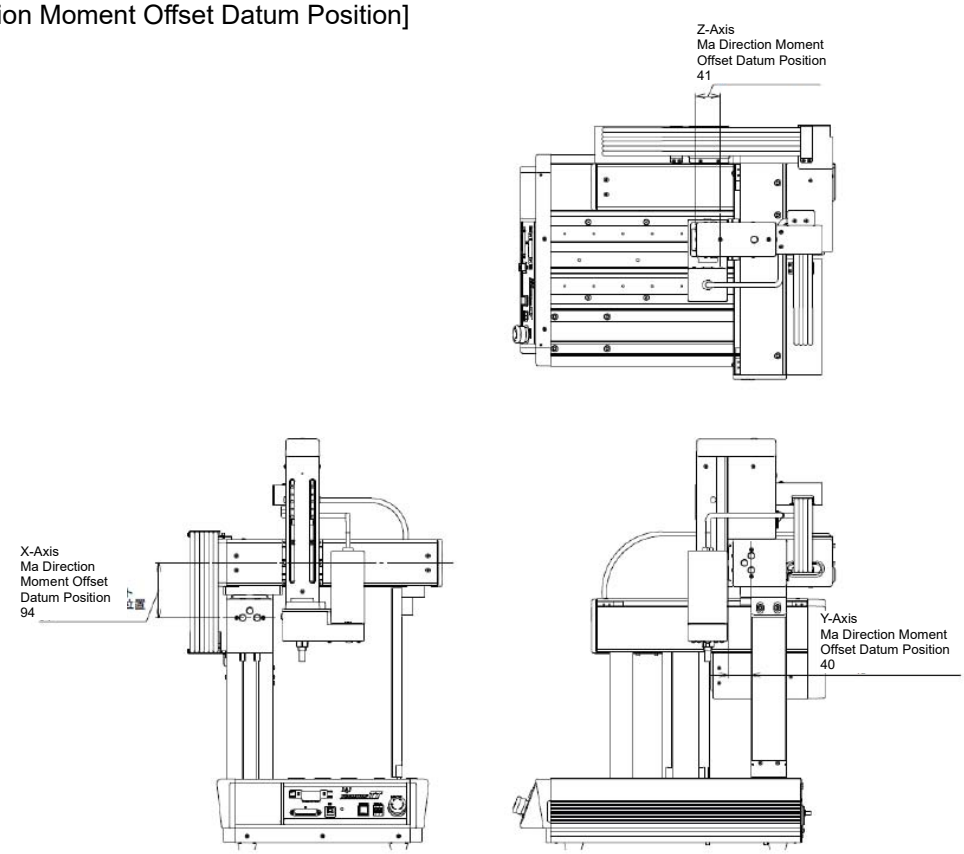

[Moment Direction of Each Axis]

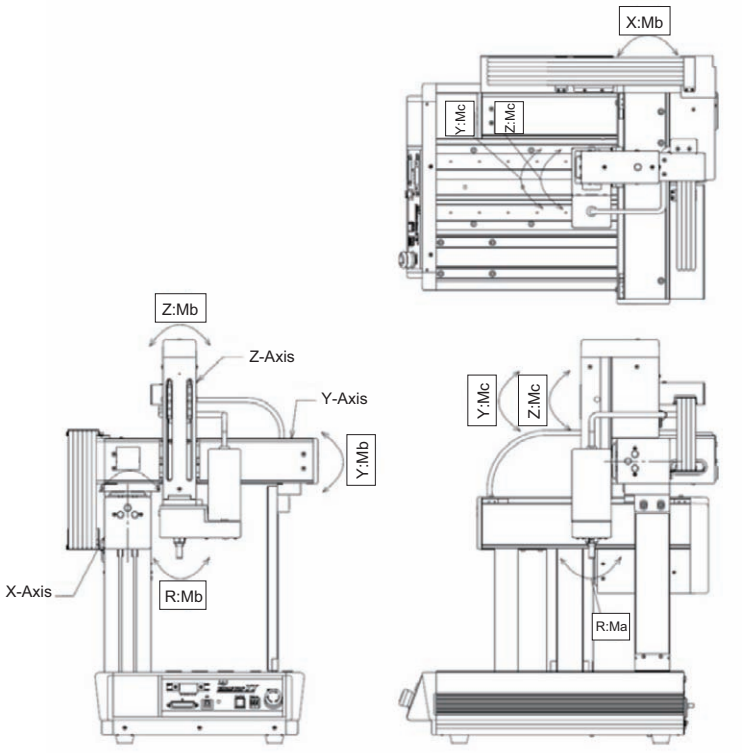

1.2.8 Duty of Continuous Operation

Perform operation at the allowable duty or below.

[How to Calculate Duty]

Figure out the load factor LF and acceleration / deceleration time ratio tod, and read the reference for the duty from the graph.

There are two patterns as shown below depending on the movement distance and acceleration / deceleration, and the way to calculate differs for each.

1) Trapezoid Pattern

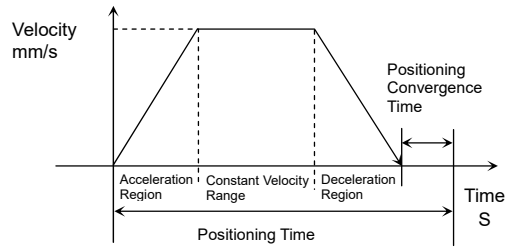

2) Triangle Pattern

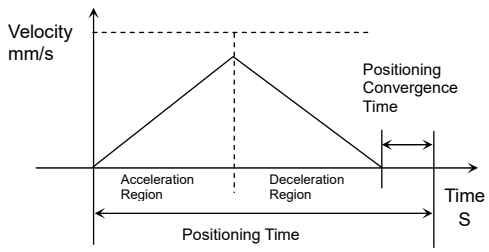

a) How to Check Operation Pattern

It can be judged whether it will be 1) Trapezoid Pattern or 2) Triangle Pattern by the reached velocity whether it is higher or lower than the set velocity when operation is made in the set acceleration for the movement distance S.

Reached Velocity Vmax [mm/s] = $\sqrt{}$[Stroke St ×Set Accelerationα]

= $\sqrt{}$[St [mm] x 9,800 [mm/S^2] ×Set Accelerationα [G]] [mm/s]

As a result; Set Velocity V < Reached Velocity Vmax …1) Trapezoid Pattern

Set Velocity V > Reached Velocity Vmax …2) Triangle Pattern

b) Load Factor LF

Load Factor LF = (M x α) / (Mr x αr) [%]

Set Payload Mr [kg] : Max. payload of set acceleration ar

Set Acceleration αr [G] : Acceleration when capable to transport set payload Mr

Transported Weight at Operation M [kg] : Mass of an object actually transported (M ≤ Mr)

Acceleration / Deceleration at Operation α [G] : Acceleration / deceleration commanded to controller (α ≤ αr)

c) Cycle Time tc*

1) For Trapezoid Pattern

Assume the times for acceleration range and deceleration range as the acceleration time ta [s] and deceleration time tb [s];

Acceleration/deceleration time ta(tb) =
(Set Velocity V [mm/s] / Acceleration / deceleration at operation α [mm/s^2]) [s]

Acceleration/deceleration movement distance Sa (Sb) =
(Acceleration / deceleration at operation α[G] x 9800 [mm/s^2]) x
(Acceleration/deceleration time ta (tb) [s])^2 / 2 [mm]

Constant velocity range movement distance S = Stroke St – Acceleration/deceleration movement distance (Sa + Sb) [mm]

Cycle time tcr =
Constant velocity range movement distance S [mm] / Set Velocity V [mm/s] (for constant velocity range) + Acceleration timeta [s] + Deceleration time tb [s] (for acceleration / deceleration range) + Positioning convergence time [s]

2) For Triangle Pattern

Acceleration/deceleration time ta (tb) =
$\sqrt{}$(Stroke St [mm] / Acceleration / deceleration at operationα [G] x 9800 [mm/s^2])

Cycle time tct = (Acceleration timeta ta + Deceleration time tb) [s] + Positioning convergence time [s]

d) Acceleration/Deceleration Time Ratio tod

1) Regardless of 1) Trapezoid Pattern or 2) Triangle Pattern;

Acceleration/Deceleration Time Ratio tod =
(Acceleration time at operation ta + Deceleration time at operation tb) / Cycle time tcr (tct)

e) Duty

Read the duty from the load factor LF figured out in b) and acceleration / deceleration time ratio tod.

e.g.) When the load factor LF = 80 [%] and acceleration / deceleration time ratio tod = 80[%], the reference for the duty ration is 75 [%]. Set the operation point so the duty ratio be at or less than this value.

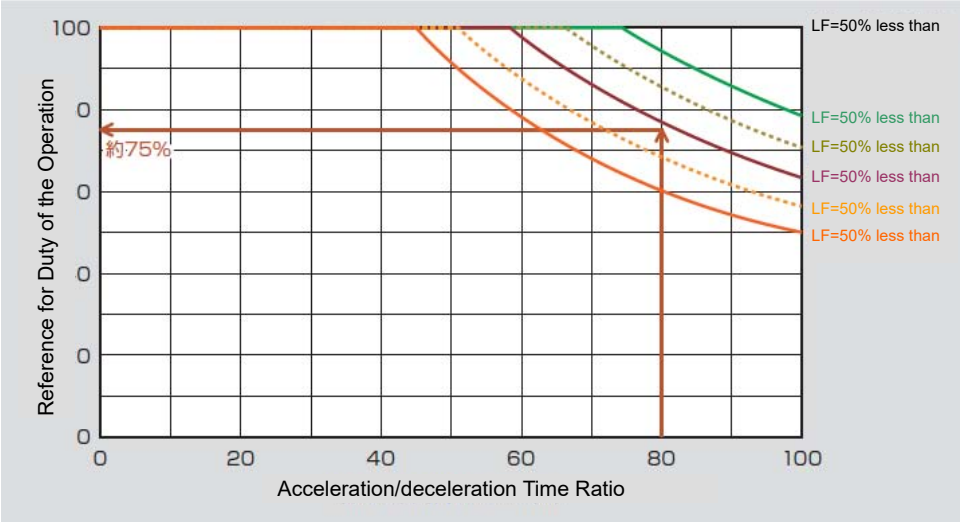

[Example for Duty Calculation for TTA]

In below, shows an example for operation of the four-axis model TTA-A4SLG-WA-50-50-15B///.

Example 1) X-axis
Calculate the duty of when;

Set Payload Mr [kg]	: 30 [kg]
Set Acceleration / Deceleration αr [G]	: 0.15 [G]
Transported Weight at Operation M [kg]	: 30 [kg]
Acceleration / Deceleration at Operation α [G]	: 0.15 [G]
Stroke St [mm]	: 500 [mm]
Set Velocity V [mm/s]	: 600 [mm/s]
Positioning convergence time [s]	: 0.15 [s]

Check the operation pattern in a).

Reached Velocity Vmax [mm/s] = √[Stroke St ×Set Acceleration α]
= √[St [mm] x 9,800 [mm/s^2] ×Set Acceleration α [G]] [mm/s]
= √[500 x 9800 x 0.15] = 857 [mm/s]

Set Velocity V < Reached Velocity Vmax …1) Trapezoid Pattern

Figure out the load factor LF in b).

Load Factor LF = (M x α) / (Mr x αr) [%]
= (30 x 0.15 x 9800) / (30 x 0.15 x 9800) = 1 (100 [%])

Figure out the acceleration/deceleration time ta (tb) /
constant velocity range movement distance S / cycle time tcr.

Acceleration / Deceleration Time ta(tb) = [Set Velocity V [mm/s] /
Acceleration / deceleration at operation α [mm/s^2]] = [600 / (0.15x9800)] = 0.41 [s]

Acceleration/deceleration movement distance Sa (Sb) =
(Acceleration / deceleration at operation α[G] x 9800 [mm/s^2]) x
(Acceleration/deceleration time ta (tb) [s])^2 / 2 = (0.15 x 9800) x 0.41^2 / 2 = 123.55 [mm]

Constant velocity range movement distance S =
Stroke St – Acceleration/deceleration movement distance (Sa + Sb) [mm]
= 500 – (123.55 + 123.55) = 252.9

Cycle time tcr = Constant velocity range movement distance S [mm] / Set Velocity V [mm/s] + Acceleration timeta [s] + Deceleration time tb [s] + Positioning convergence time [s]
= 252.9/600 + 0.41+0.41+0.15 = 1.39 [s]

Figure out the acceleration / deceleration time ratio tod in d).

Acceleration/Deceleration Time Ratio tod = (cceleration time at operation ta + Deceleration time at operation tb) /Cycle time tcr (tct) = (0.41+ 0.41) /1.39 = 0.59 (59 %)

In e), the reference of the duty will be 78% when the load factor LF = 100% and acceleration / deceleration time ratio tod = 66% according to the graph.
Use the actuator with consideration to select the velocity, acceleration / deceleration and payload so the actual operation point should be at this duty or less.

Example 2) Y-axis

Calculate the duty of when;

Set Payload Mr [kg]	: 11 [kg]
Set Acceleration / Deceleration αr [G]	: 0.2 [G]
Transported Mass of ZR-axes M [kg]	: 7.7 [kg]
Acceleration / Deceleration at Operation α [G]	: 0.2 [G]
Stroke St [mm] = Movement Distance	: 100 [mm]
Set Velocity V [mm/s]	: 600 [mm/s]
Positioning convergence Time [s]	: 0 [s]

Check the operation pattern in a).

Reached Velocity Vmax = √[Stroke St ×Set Acceleration α]
= √[St [mm] x 9,800 [mm/s^2] x Set Acceleration α [G]]
= √[100 x 9800 x 0.2] = 443 [mm/s]

Set Velocity V < Reached Velocity Vmax …1) Trapezoid Pattern

Figure out the load factor LF in b).

Load Factor LF = (M x α) / (Mr x αr) [%]
= (7.7 x 0.2 x 9800) / (11 x 0.2 x 9800) = 0.7 (70 [%])

Figure out the acceleration / deceleration time ta (tb) and the cycle time tct in c).
Acceleration / Deceleration Time ta (tb) = √(Movement Distance St [mm] / Acceleration / Deceleration at Operationα [G] x 9800 [mm/s^2])
= √(100 / (0.2 x 9800)) = 0.23 [s]

Cycle Time tct =
(Acceleration / Deceleration Time ta + Deceleration Time tb) [s] + Positioning termination time [s]
= 0.23 + 0.23 + 0.15 = 0.61 [s]

Figure out the acceleration / deceleration time ratio tod in d).

Acceleration/Deceleration Time Ratio tod =
(Acceleration Tim at Operation ta + Deceleration Time at Operation tb) /
Cycle Time tct
= (0.23+ 0.23) / 0.61 = 0.75 (75 %)

In e), the reference of the duty will be 90% when the load factor LF = 70% and acceleration / deceleration time ratio tod = 75% according to the graph.
Use the actuator with consideration to select the velocity, acceleration / deceleration and payload so the actual operation point should be at this duty or less.

1.3 Electrical Specifications

Item			Description
Power supply Voltage			AC100 to 230V ±10%
Power Supply Frequency Range			50/60Hz ±5%
Current Consumption	Pulse Motor		2.9A/1.2A (AC100/230V, when rated load)
	Servo Motor		2-axis type: 2.9A/1.2A (AC100/230V, when rated load) 3-axis, 4-axis type: 5.8A/2.4A (AC100/230V, when rated load)
Service Power Output (For I/O)			24V DC ±10% MAX. 1A
Rush Current	Pulse Motor		At 100V AC: 15A Typ. At 200V AC: 30A Typ. (Surrounding temperature 25℃, No repeating of AC ON/OFF)
	Servo Motor		At 100V AC: 30A Typ. At 200V AC: 60A Typ. (Surrounding temperature 25℃, No repeating of AC ON/OFF)
Transient Power Cutoff Durability			20ms
Motor Drive Power Supply Line (Between MPI and MPO)	Pulse Motor	Voltage	DC24V (Built-in Power Source)
		Rated Current	2-axis type: 4A 3-axis type: 6A 4-axis type: 8A
		Peak Max. DC Current Output	2-axis type: 8A 3-axis type: 12A 4-axis type: 16A
	Servo Motor	Voltage	DC24V
		Rated Current	2-axis type: MPO_A 7A, MPO_B 0A 3-axis type: MPO_A 7A, MPO_B 4A 4-axis type: MPO_A 7A, MPO_B 8A
		Peak Max. DC Current Output	2-axis type: MPO_A 16A, MPO_B 0A 3-axis type: MPO_A 16A, MPO_B 8A 4-axis type: MPO_A 16A, MPO_B 16A
Emergency Stop Input (EMGIN), Enable Input (ENBIN)			DC24V/10mA or less
Contact Output (EMGS1+/-, EMGS2+/-, ENBS1+/-, ENBS2+/-)			DC30V/0.5A or less
Motor Control System			Weak field-magnet vector control
Serial Communication Interface (SIO Port)	Teaching Port		Connector dedicated for teaching tool (Serial communication protocol (format B) Connector: D-sub25-pin, USB B connector Baud rate: 9.6、19.2、38.4、57.6、76.8、115.2kbps Max. cable length: 10m (RS232C), 5m (USB)
External Interface	PIO Type		Signal I/O dedicated for 24V DC (Selected from NPN/PNP) • • • 16 points of input, 16 points of output When extension DIO mounted: 48 points of input, 48 points of output Cable length Max.100m
	Field Network Type		DeviceNet, CC-Link, PROFIBUS-DP, EtherNet/IP, EtherCAT, RS232C, RS485
Data Setting and Input			PC software or teaching pendant
Data Retention Memory			Position data and parameters are saved in the nonvolatile memory
Number of Programs			255
Number of Program Steps			9999
Number of Multitask Programs			16
Number of Positions			30000 points (Note) 10000 points for system memory backup
LED Display (Allocated on Front Panel)			RDY (Green): PIO program operation available ALM (Orange): Error in operation cancel level or more generated EMG (Red): In emergency stop HPS (Green): Home-return operation completed on all axes CKE (Orange): System lock error
Z-Axis Electromagnetic Brake Compulsory Release Switch (Allocated on Front Panel)			Switchover of NOM (normal) / BK RLS (compulsory release)
Insulation Resistance			Between secondary – FG 500V DC 10MΩ or more

Item		Description
Withstanding Voltage		Between primary – secondary 1500V AC For 1 minute Between primary – FG 1500V AC For 1 minute
Current Leakage		0.75mA or less
Grounding		10A 1.0V or less (for 10 seconds)
Protection Function against Electric Shock		Class I basic insulation
Cooling Method		Forced Air-Cooling
Environmental Condition Specifications	Temperature Range for Usage	0 to 40 °C (there should be no condensation or freeze)
	Humidity Range for Usage	85% or less (there should be no condensation or freeze)
	Temperature Range for Storage	-20 to 70 °C
	Surrounding environment	There should be no corrosive gas, especially no remarkable dust
	Maximum Operation Height	1,000m
	Vibration	Vibration frequency: 10 to 57Hz / Vibration band: 0.075mm Vibration frequency: 57 to 150Hz / Acceleration 9.8m/s^2 XYZ each direction Sweep time: 10min, Times of sweeping: 10 times
	Overvoltage Category	II
	Pollution Degree	II
	Protection Class	IP20

Note 1 It increases in 0.3A in Field Network Type.
Note 2 In-rush current will flow for approximately 5msec after the power is turned on (at 40°C).
Note that in-rush current may vary depending on the impedance of the power supply line.

1.3.1 Protection Circuit

Although there are fuses mounted in this robot for purpose of protecting the circuit, it is not what a customer can replace.
With sufficient margin in design, it is a rear case that the fuses get broken, but please make sure to set up a breaker shown below external before starting to use.

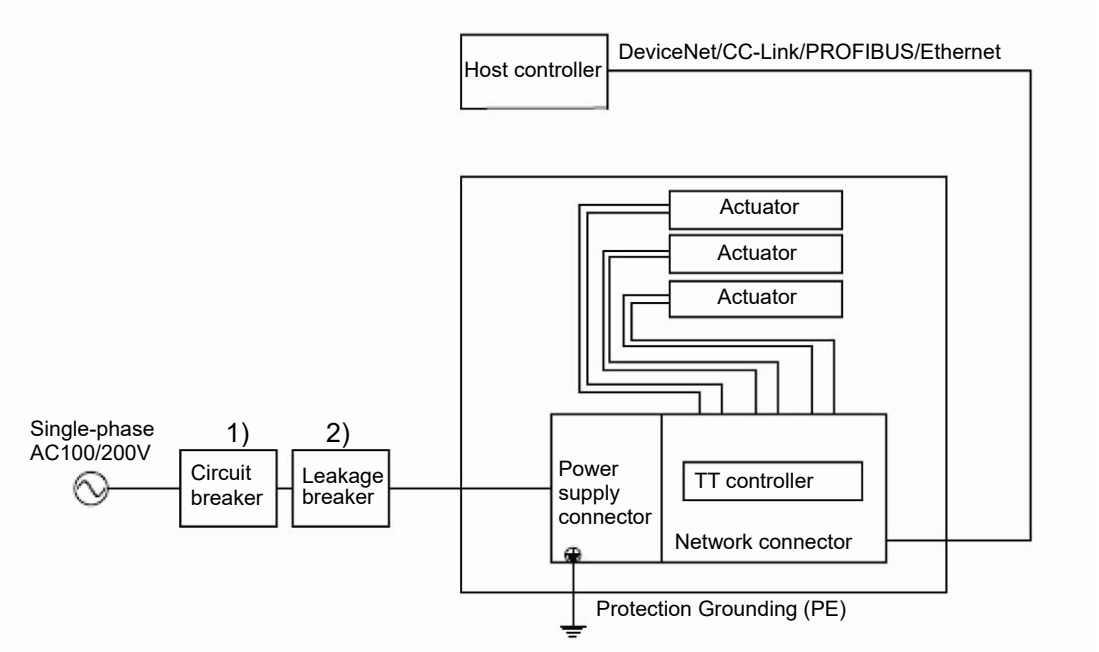

The figure shows the case of three-axis type. Take the same countermeasure for two-axis type.

[Example for protection equipment in order to secure safety]

No.	Name	Model	Manufacturer	Quantity	Remarks
1)	Circuit Breaker (1)	NF32-SVF-3P-15A	Mitsubishi	1	AC100/200V Input common
2)	Leakage Breaker (1)	NV32-SVF-3P-15A-AC100-240V-30mA-CE	Same as above	1	AC100/200V Input common

* Number in brackets ( ) show the drawing number described later.

[1] Selection of Circuit Breaker

Follow the description below for selection of the circuit breaker.

- 3 times of the rated current may flow to the controller during the acceleration/deceleration.
  Select one that would not trip when this current flows.
  If it trips, select a breaker in rated current one rank higher.
  (Check in the operation characteristics curve shown in the supplier catalog)

- Select one that would not trip at in-rush current.
  (Check in the operation characteristics curve shown in the supplier catalog)

- Select a rated cutoff current with the current value that can cut off the flow of current even when short-circuit current flows.
  Rated cutoff current > Short-circuit current = Primary current amperage / Power voltage
  Have margin to select the rated current of a circuit breaker.

Rated current of circuit breaker >
(Rated Motor Power Capacity [VA] + Control Power Capacity [VA]) ÷ AC Input Voltage ×Margin (1.2 to 1.4 for reference)

[2] Selection of Leakage Breaker

- Regarding the leakage breaker, it is necessary to have a clear purpose for selection such as a fire protection or protection of human body.

- Leak current varies depending on the capacity of connected motor, cable length and the surrounding environment. Measure the leak current at the point where a ground fault circuit interrupter is to be installed when leakage protection is conducted.

- Use the harmonic type for a leakage breaker.

1.3.2 Standard I/O Input and Output Interface

<table>
<tr><td></td><td colspan="3">Input Section</td><td colspan="2">Output Section</td></tr>
<tr><td rowspan="5">Type</td><td colspan="2">Input Voltage</td><td>24V DC ±10%</td><td>Load Voltage</td><td>24V DC ±10%</td></tr>
<tr><td colspan="2">Input Current</td><td>7mA / per output</td><td rowspan="3">Load Current</td><td rowspan="3">100mA / per circuit,
400mA(Note 1) / 8 ports</td></tr>
<tr><td rowspan="2">ON/OFF Voltage</td><td>ON</td><td>Min. 16V DC (NPN)
8V DC (PNP)</td></tr>
<tr><td>OFF</td><td>Max. 5V DC (NPN)
19V DC (PNP)</td></tr>
<tr><td colspan="2">Insulation Type</td><td>Photocoupler Insulation</td><td>Insulation Type</td><td>Photocoupler Insulation</td></tr>
<tr><td>NPN</td><td colspan="3">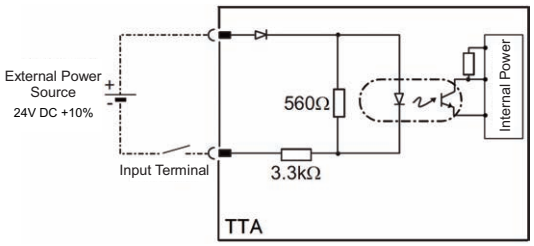
</td><td colspan="2">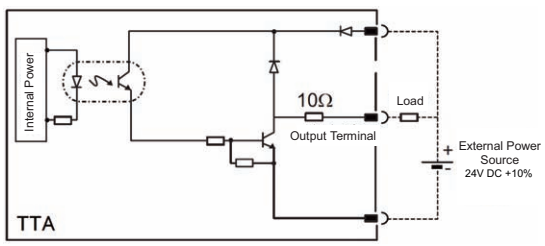
</td></tr>
<tr><td>PNP</td><td colspan="3">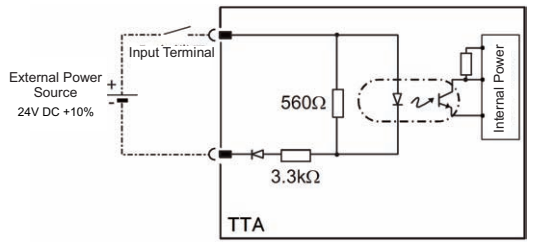
</td><td colspan="2">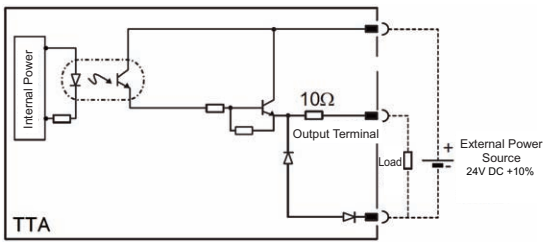
</td></tr>
</table>

Note 1: The maximum load current total becomes 400mA for every 8 ports from Output Port No. 316. (Maximum in every point is 100mA)

Note 2: When service power output is OFF, supply I/O power.
When service power output is ON, it is not necessary to supply I/O power as the internal power source is applied.

1.3.3 Standard I/O Connector Pin Assignment

Standard I/O Connector Pin Assignment

Pin No.	Category	Assignment	Pin No.	Category	Assignment
1A	24V (Note 1)	P24	1B	Output	OUT0
2A	24V (Note 1)	P24	2B		OUT1
3A	-	-	3B		OUT2
4A	-	-	4B		OUT3
5A	Input	IN0	5B		OUT4
6A		IN1	6B		OUT5
7A		IN2	7B		OUT6
8A		IN3	8B		OUT7
9A		IN4	9B		OUT8
10A		IN5	10B		OUT9
11A		IN6	11B		OUT10
12A		IN7	12B		OUT11
13A		IN8	13B		OUT12
14A		IN9	14B		OUT13
15A		IN10	15B		OUT14
16A		IN11	16B		OUT15
17A		IN12	17B	-	-
18A		IN13	18B	-	-
19A		IN14	19B	0V (Note 1)	N
20A		IN15	20B	0V (Note 1)	N

Note 1 [24V] and [0V] are 24V power input when the service power output is off, and 24V power output when the service power output is on.
Also, do not attempt to apply external power supply when the service power output is on.
[Refer to 1.3.7. Specifications for Service Power Supply Output]

1.3.4 Extension I/O Input and Output Interface

	Input Section			Output Section	
Type	Input Points		16 points	Output Points	16 points
	Input Voltage		24V DC ±10%	Load Voltage	24V DC ±10%
	Input Current		4mA / per output	Load Current	50mA/1 per circuit
	ON/OFF Voltage	ON	Min. 18V DC		
		OFF	Max. 6V DC		
	Insulation Type		Photocoupler Insulation	Insulation Type	Photocoupler Insulation
NPN	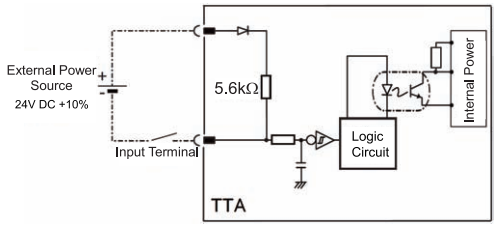			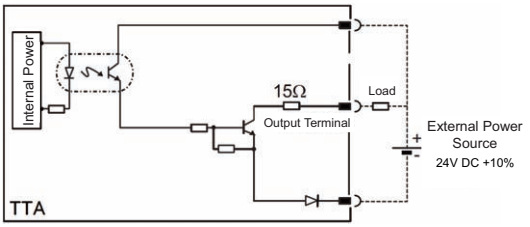	
PNP	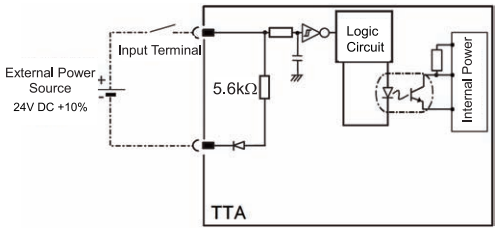			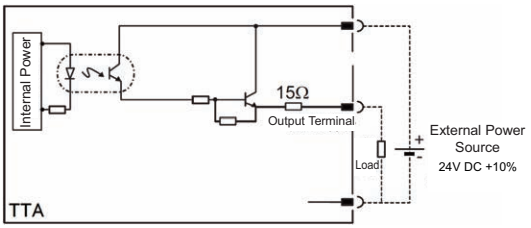	

Note 1: The maximum load current total becomes 400mA for every 8 ports from Output Port No. 316.
(Maximum in every point is 100mA)

1.3.5 Extension I/O Connector Pin Assignment

Extension DIO Connector Pin Assignment

Pin No.	Category	Assignment	Pin No.	Category	Assignment
1A	24V (Note 1)	P24	1B	Output	OUT0
2A	24V (Note 1)	P24	2B		OUT1
3A	-	-	3B		OUT2
4A	-	-	4B		OUT3
5A	Input	IN0	5B		OUT4
6A		IN1	6B		OUT5
7A		IN2	7B		OUT6
8A		IN3	8B		OUT7
9A		IN4	9B		OUT8
10A		IN5	10B		OUT9
11A		IN6	11B		OUT10
12A		IN7	12B		OUT11
13A		IN8	13B		OUT12
14A		IN9	14B		OUT13
15A		IN10	15B		OUT14
16A		IN11	16B		OUT15
17A		IN12	17B	-	-
18A		IN13	18B	-	-
19A		IN14	19B	0V (Note 1)	N
20A		IN15	20B	0V (Note 1)	N

Note 1: [24V] and [0V] are necessary to have the power supply even when the service power output is on.
(It is not connected to the service power supply.)

1.3.6 Table for I/O Assignment

The functions described in brackets ( ) are not set at the delivery.

Type	Port No.	Function	Type	Port No.	Function
Internal DI	000	Program Start	Internal DO	300	ALM (LED on the front panel)
	001	Switch No. 1 (Additional switch), (Software reset)		301	RDY (LED on the front panel)
	002	(Servo ON)		302	EMG (LED on the front panel)
	003	(Startup of auto start program)		303	Automatic operation mode (Start switch LED)
	004	(Software interlock)		304	HPS (LED on the front panel)
	005	Switch No. 2 (Additional switch), (Pause reset)		305	System reservation
	006	Switch No. 3 (Additional switch), (Pause)		306	System reservation
	007	Program number specification Ones place of the digital switch		307	System reservation
	008			308	Internal DI No. 001 ON/OFF
	009			309	Internal DI No. 002 ON/OFF
	010			310	Internal DI No. 003 ON/OFF
	011	Program number specification Tens place of the digital switch		311	Internal DI No. 004 ON/OFF
	012			312	Internal DI No. 005 ON/OFF
	013			313	Internal DI No. 006 ON/OFF
	014			314	System reservation
	015	Switch No. 4 (Additional switch), (Home return, etc.)		315	Internal DI No. 015 ON/OFF
External DI	016 to 031	General-purpose input (Standard I/O Connector (I/O1))	External DO	316 to 331	General-purpose output (Standard I/O Connector (I/O1))
Internal DI	032	System reservation	Internal DO	332	7-segment user display digit specification
	033			333	7-segment user display digit specification
	034			334	System reservation
	035			335	System reservation
	036			336	System reservation
	037			337	7-segment display refresh
	038			338	7-segment user/system alternate display
	039			339	7-segment user display specification
	040			340	DT0 (7-segment user display bit)
	041			341	DT1 (7-segment user display bit)
	042			342	DT2 (7-segment user display bit)
	043			343	DT3 (7-segment user display bit)
	044			344	DT4 (7-segment user display bit)
	045			345	DT5 (7-segment user display bit)
	046			346	DT6 (7-segment user display bit)
	047			347	System reservation
External DI	048 to 299 (Note 1)	General-purpose input • Field network • Extension DIO (Extension I/O slot 1(I/O2)) (Extension I/O slot 2(I/O3))	External DO	348 to 599 (Note 1)	General-purpose output • Field network • Extension DIO (Extension I/O slot 1(I/O2)) (Extension I/O slot 2(I/O3))

(Note 1) The input and output port numbers are:

Input 000 to 299 (300 points max.) Output 300 to 599 (300 points max.)

◎ Coution for I/O Assignment of Switches from Switch No. 1 (Additional Switch) to Switch No. 4 (Additional Switch)

Switch No. 1 (additional switch) should be connected to Port No. 001 and assigned.
Therefore, if the setting of Input Function Select 001 in I/O Parameter No. 31 is 0, general-porpose input, the switch should be for the general-porpose input.
If the setting of Input Function Select 001 in I/O Parameter No. 31 is set to 1, software reset, the switch should be for the software reset.
(When the setting of Input Function Select 001 Physical Input Port Number in I/O Parameter No. 284 has not changed from that at the delivery, and the physical input port is set to No. 001)
Also, Output Port No. 308 is connected to Input Port No. 001.
Be aware that, if Output Port No. 308 is turned on, Input Port No. 001 also turns on even though Switch No. 1 (additional seitch) is not pressed.
The relations between each additional switch and port numbers are as described below.

Switch	Port No.	Input Function Select	Connected Output Port No.	Remark
Switch No. 1 (Additional switch)	001	I/O Parameter No. 31 0: General-porpose input 1: Software reset	308	When the setting of Input Function Select 001 Physical Input Port Number in I/O Parameter No. 284 has not changed from that at the delivery, and the physical input port is set to No. 001
Switch No. 2 (Additional switch)	005	I/O Parameter No.35 0: General-porpose input 1: Operation-pause reset signal (ON edge)	311	When the setting of Input Function Select 005 Physical Input Port Number in I/O parameter No. 288 has not changed from that at the delivery, and the physical input port is set to No. 005
Switch No. 3 (Additional switch)	006	I/O Parameter No. 36 0: General-porpose input 1: Operation-pause reset signal (OFF level)	312	When the setting of Input Function Select 006 Physical Input Port Number in I/O Parameter No. 289 has not changed from that at the delivery, and the physical input port is set to No. 006
Switch No. 4 (Additional switch)	015	I/O Parameter No. 45 0: General-porpose input 1: All effective axes homing (ON edge) 2: Home return of all valid incremental axes (ON edge)	315	When the setting of Input Function Select 015 Physical Input Port Number in I/O Parameter No. 298 has not changed from that at the delivery, and the physical input port is set to No. 015

1.3.7 Specifications for Service Power Supply Output

By having the service power switch set the service power output ON, power supply to the standard I/O circuit and service power output from the standard I/O connector can be conducted. (It becomes unnecessary to prepare I/O power source externally.)

Specifications for Service Power Supply Output

Output Voltage	24V DC ±10%
Max. Output Current	1A
Insulation	Not insulated (against TP, USB, System I/O and Motor drive power line)

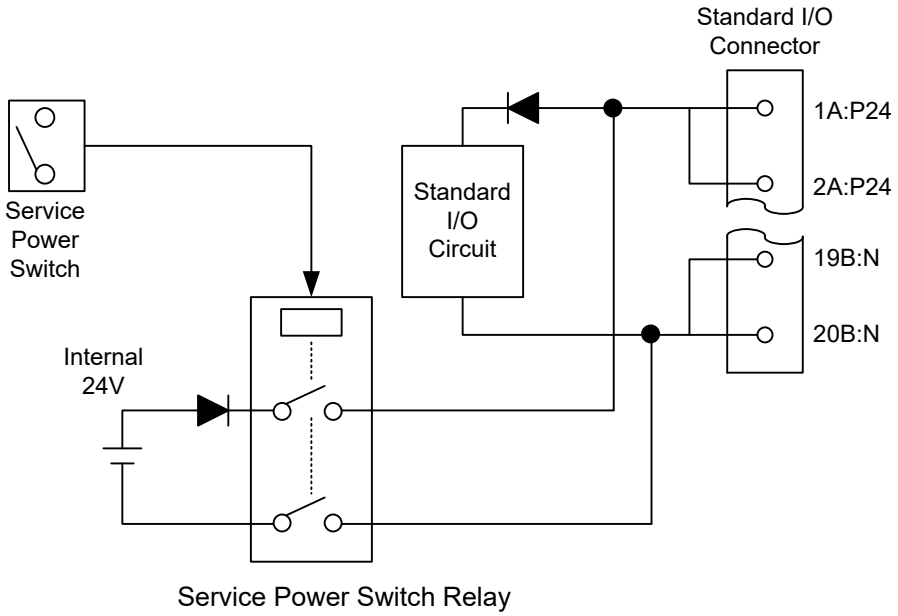

Simplified Circuit Diagram of Service Power Output

* Have the system construction to avoid short-circuit when having an external grounding.

1.4 Options

1.4.1 X, Y and Z-Axes Options

[1] Home-Position Check Sensor (Model: HS)
For the normal home-return operation of the single axis robots, “Pressing System” is adopted which determines the home position by detecting the Z-phase after pressing the slider to the stopper and reversing it.
This is the option to have the home-return operation with reverse by sensing on the proximity sensors, not by pressing.

[2] Reversed-Home Specification (Model: NM)
The home position is ordinary placed on the motor side. When placing on the other side is desired due to the actual installation layout and so on, it is available to have the home direction set reversed by option.

[3] Brake Specification (Model: B)
This is a protection structure not to damage the attached objects by the slider being dropped when the power of the servo is turned off in case the actuator is mounted vertically.

[4] With Cover Specification (dedicated for 4-axis type) (Model: CO)
A cover can be attached in order to hide the slider part when the Z-axis slider is not to be used in the four-axis type.

1.4.2 Equipment Options

[1] Y Change in Y-Axis Mount Position (H1, H2, F1 and F2)
[Refer to Section 1.1.5 Model Codes for Option of Y-axis Mount Position Change]

[2] Main-Unit Bracket-Equipped Type (Model: FT4, FT6)
FT4 : with 4 pieces of brackets
FT6 : with 6 pieces of brackets

[3] Support Added for 2020 Type (Model: AP)
20-15 and 20-20 are cantilever in standard, but they can be changed to gate-shaped in this option.

[4] Detachable Operation Unit Type (Model: OS)
Remote operation can be performed by taking the control panel off the front side of the main unit.

[5] Side Slot Attachment Type (Model: SLT0, SLT)
SLT0 : Side Slot 180mm Attachment Type
(When selecting Slot Type as well as FT4 or FT6)
SLT : Side Slot for Each Stroke Attachment Type
(FT4 and FT6 cannot be selected)

[6] Side Plate to Attach Devices (Model: PTH, PTN)
PTH : Side Plate to Attach Devices (with hole)
(Position to attach Y-axis in standard, exclusive setting for each type of F1 and F2)
PTN : Side Plate to Attach Devices (With no hole)
(Position to attach Y-axis in standard, exclusive setting for each type of F1 and F2)

[7] ZR-axis Mounting Position 64.5mm Forward (Model: FZ)

Chapter 2 Installation

2.1 Transportation

(1) Handling the Packed Unit
- Do not damage or drop. The package is not applied with any special treatment that enables it to resist an impact caused by a drop or crash.
- Transport a heavy package with at least more than two operators. Consider an appropriate method for transportation.
- Keep the unit in horizontal orientation when placing it on the ground or transporting. Follow the instruction if there is any for the packaging condition.
- Do not step or sit on the package.
- Do not put any load that may cause a deformation or breakage of the package.

(2) Handling the Actuator After Unpacking
- Hold the base part of the body when transporting the actuator main body.
- Do not hit or drop the actuator during transportation.
- Do not attempt to force any part of the actuator.

2.2 Installation and Storage • Preservation Environment

[1] Installation Environment

The actuator should be installed in a location other than those specified below.
Also provide sufficient work space required for maintenance inspection.

- Where the actuator receives radiant heat from strong heat sources such as heat treatment furnaces
- Where the ambient temperature exceeds the range of 0 to 40°C
- Where the temperature changes rapidly and condensation occurs
- Where the relative humidity exceeds 85% RH
- Where the actuator receives direct sunlight
- Where the actuator is exposed to corrosive or combustible gases
- Where the ambient air contains a large amount of powder dust, salt or iron (at level exceeding what is normally expected in an assembly plant)
- Where the actuator is subject to splashed water, oil (including oil mist or cutting fluid) or chemical solutions
- Where the actuator receives impact or vibration

If the actuator is used in any of the following locations, provide sufficient shielding measures:
- Where noise generates due to static electricity, etc.
- Where the actuator is subject to a strong electric or magnetic field
- Where the actuator is subject to ultraviolet ray or radiation

[2] Storage • Preservation Environment

- The storage and preservation environment should comply with the same standards as those for the installation environment. In particular, when the machine is to be stored for a long time, pay close attention to environmental conditions so that no dew condensation forms.
- Unless specially specified, moisture absorbency protection is not included in the package when the machine is delivered. In the case that the machine is to be stored and preserved in an environment where dew condensation is anticipated, take the condensation preventive measures from outside of the entire package, or directly after opening the package.
- Keep the temperature between -20 to 70°C for storage and preservation.
- Storage and preservation should be performed in the horizontal condition. In the case it is stored in the packaged condition, follow the posture instruction if any displayed on the package.

2.3 How to Install

This chapter explains how to install the actuator on your mechanical system.

2.3.1 Installation Orientation

Do pay attention to these items.

○: Available ×: Not available

Horizontal Installation	Sideways Installation	Ceiling Mount Installation
○	×	×

Installation Orientation

Horizontal Installation	Sideways Installation	Ceiling Mount Installation
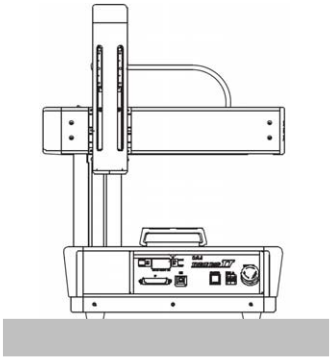	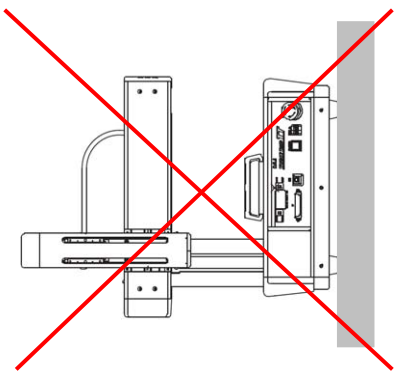	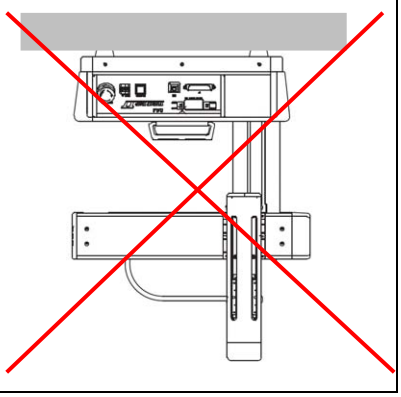

2.3.2 How to Fix Unit

This product is equipped with rubber legs that provide the structure to prevent from moving the unit easily during its operation.
There may be a case that the unit moves depending on the condition of use (such as load weight or acceleration/deceleration speed).
By using the optional fixing brackets, move of the unit can be prevented.
Attached the fixing brackets to the T-grooves on the body with M6 × 12 hex socket head cap screws.

[1] Work Moving Type

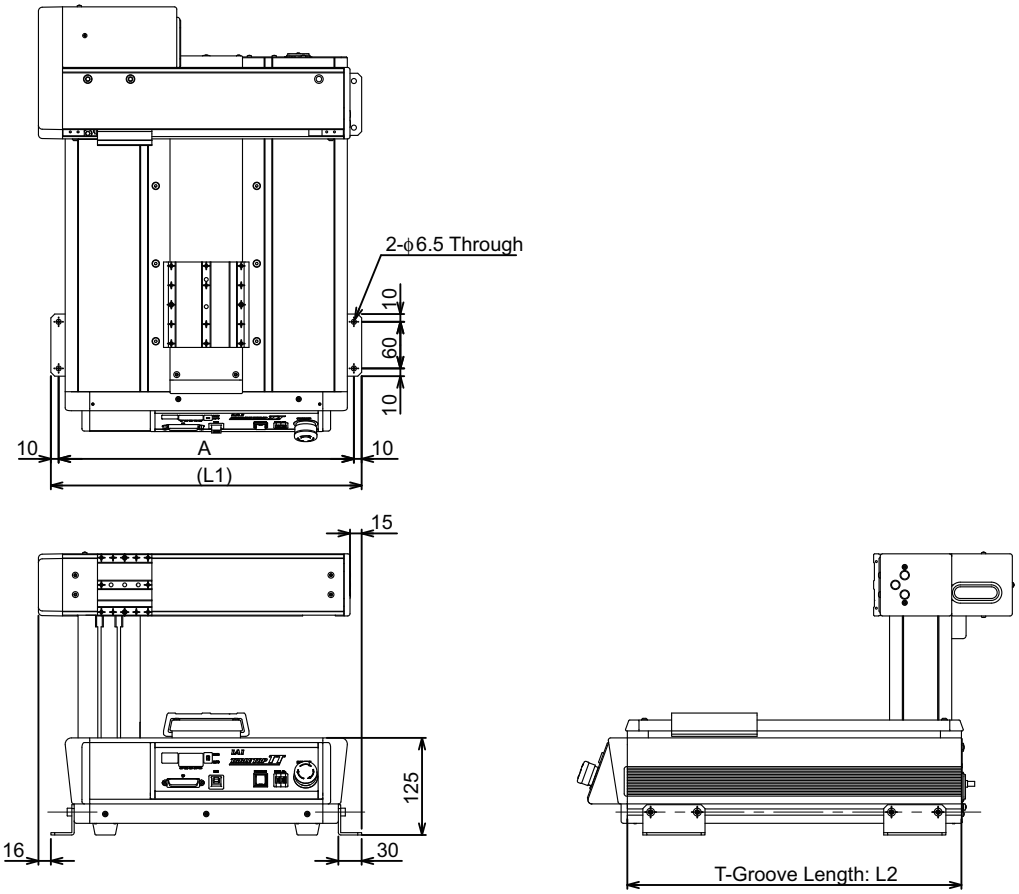

Model	L1	L2	A
2020	400	430	380
3030	500	530	480
4040	600	630	580
5050	700	730	680

[2] Work Fixing Type

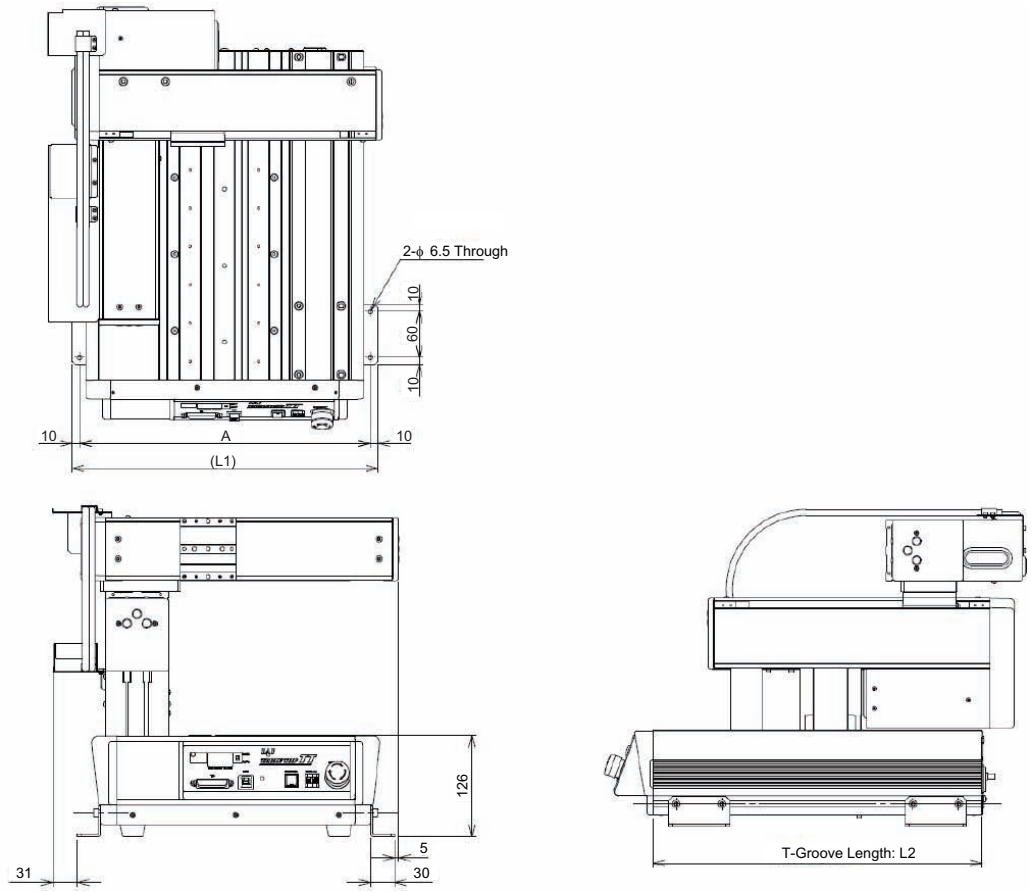

Model	L1	L2	A
2015	400	430	380
3025	500	530	480
4035	600	630	580
5045	700	730	680

Stiffness of Floor for Installation

As large reaction force is applied to the platform to install a robot, it is necessary to prepare a platform with enough stiffness.
Not only to endure the weight of the robot, the platform needs to have enough stiffness to endure dynamic moment of inertia at the maximum speed operation.
Affix the platform on the floor so the platform will not move due to the robot operation.
Have a structure on the installation platform capable to mount the robot horizontally.

To affix the unit, purchase the unit fixing bracket in option or prepare a bracket separately.
When you make your own bracket, have oblong holes to secure margin to the pitch between holes in the direction of the product width, and make sure the straight portion on the oblong holes is 3mm or more.

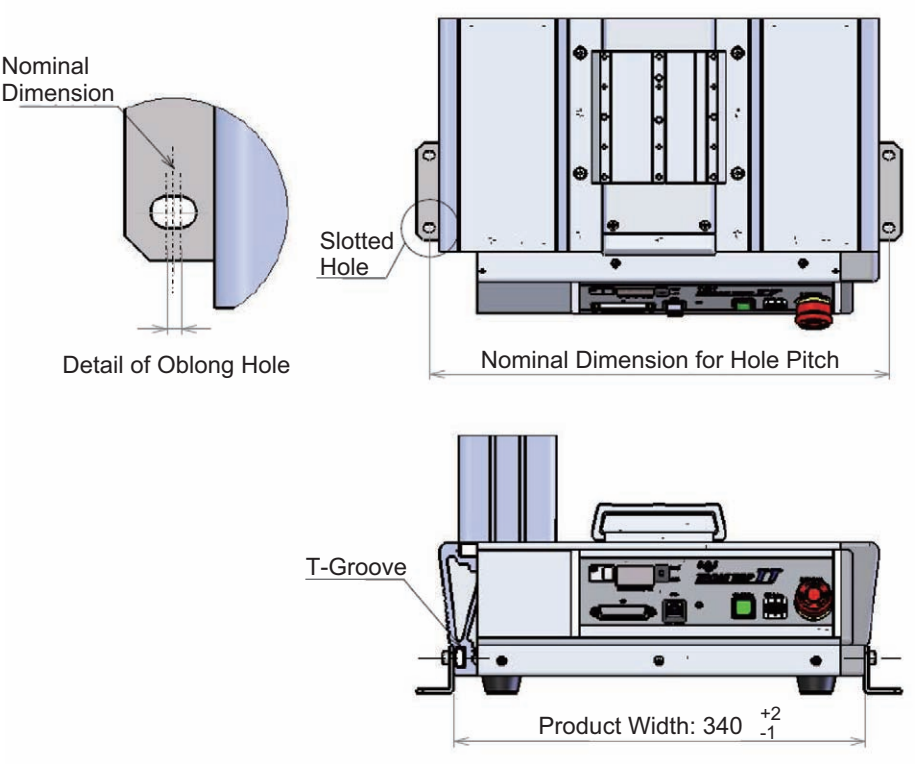

2.3.3 Attachment of the Transported Object

There are screw holes and reamed holes equipped on the slider surface of each axis in order to affix transported objects.
For more details refer to the [Chapter 8 External Dimensions].

Tightening screws

- Use hexagonal socket head bolts for the male threads for installing the attachment.
- It is recommended to use high-tensile bolts with ISO-10.9 or more.
- Make sure to have the effective length of screw engagement described below or more for the tightening of a bolt and a female screw.
  When female screw is on steel → thread length same as nominal diameter
  When female screw is on aluminum → thread length 1.8 times longer than nominal diameter

⚠ Caution:	Pay special attention when selecting the bolt length. In case that an inappropriate length of a bolt is applied, it may cause a drop in the operation accuracy or an unexpected accident due to a damage to the tapped holes, insufficient strength of actuator attachment or an interference with the operating area.

2.3.4 Loadable Weight on Table

Refer to the table below for the weight available to load on TTA Table portion (top surface of main unit, portion other than the slider for the table moving type).

Loadable Weight on Table

Model	Mass [kg]
A-2020	20
A-3030	30
A-4040	40
A-5050	50
C-2015	40
C-3025	60
C-4035	80
C-5045	100

⚠ Caution: Rubber feet to support the main unit get compressed by a work piece, tools and table load. The amount of compression is approximately 1.0mm when the maximum loaded weight is applied.
The unit may get tilted depending on the position to apply a load. Consider to fix the main unit if necessary.

Secure 2mm or more of clearance to the frames on the main body when loading a work piece on the X slider.

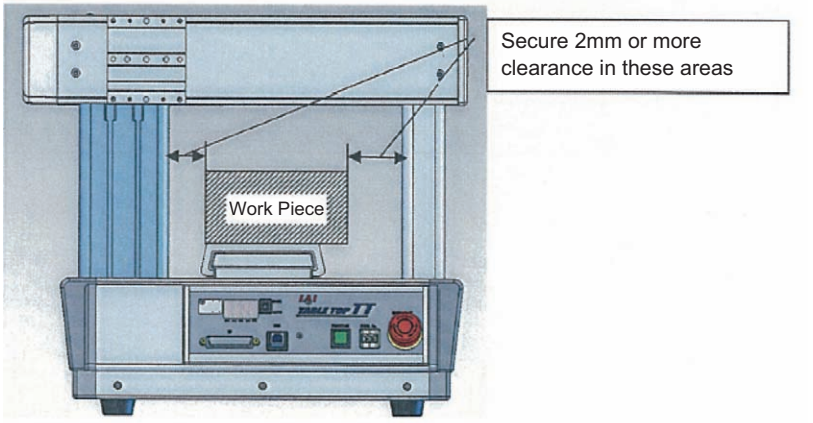

2.3.5 How to Attach Supportive Tools

There are T-grooves equipped on the main unit and the frame to support the Y-axis. By using a nut, supportive tools can be attached.
It is recommended to apply a T-nut or square nut on the T-groove, but a hexagon nut can also be used. Pay attention to the screw length so the tip of the screw would not touch the bottom of the T-groove when attaching.

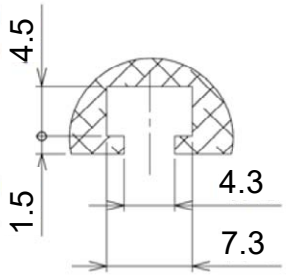

T-Groove on Frame

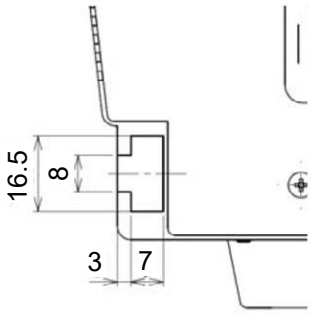

T-Groove on Main Unit

2.4 Procedures to Detach Operation Part

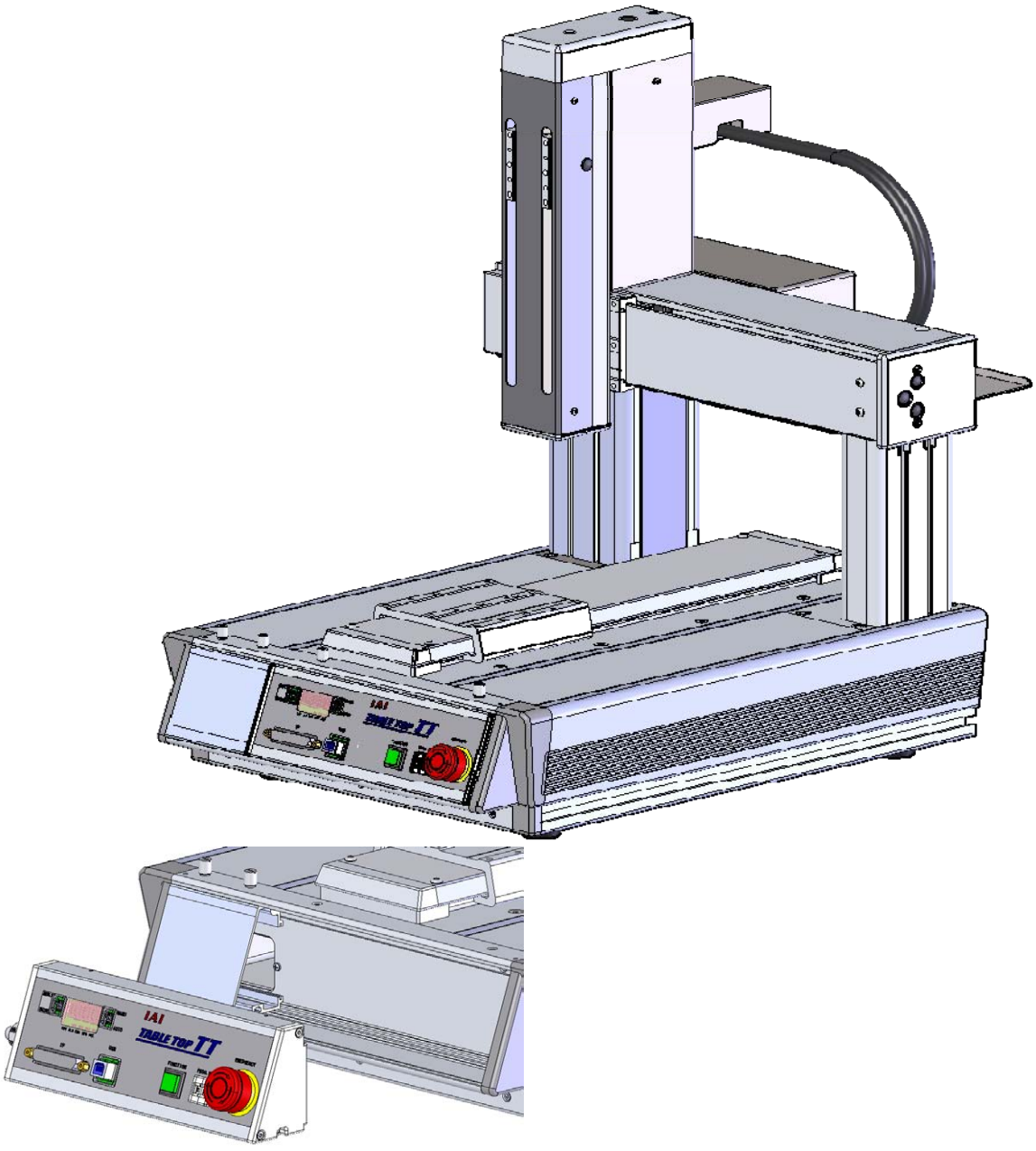

In this section, explains how to detach the operation part in the detachable operation option.

<Required Tools/Measurement Equipment> None

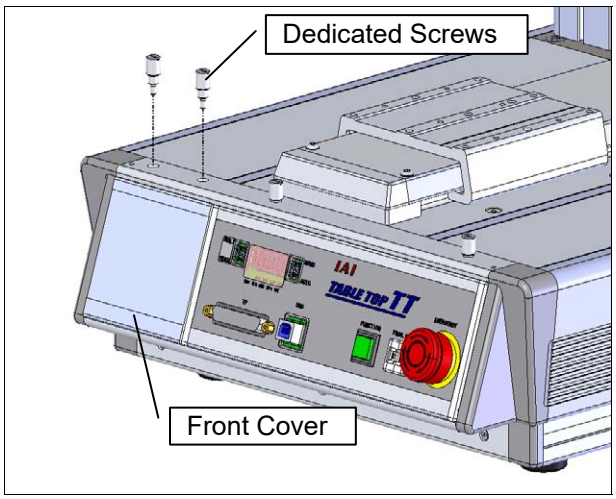

[Detaching Operation Part Step (1)]
Take off the dedicated screws (2pcs) on the front cover side.
Dedicated screws can be taken off with hand.

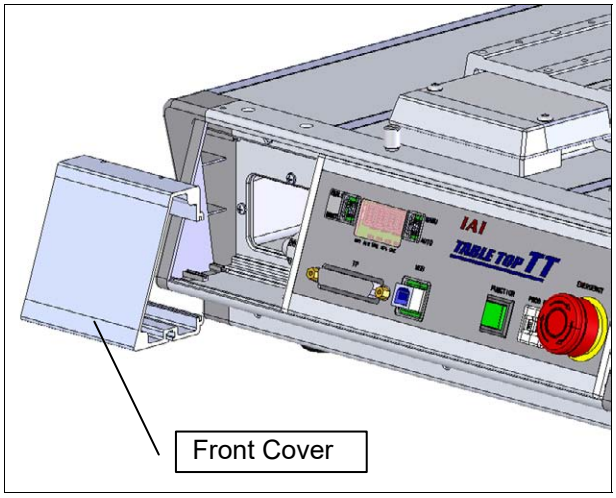

[Detaching Operation Part Step (2)]
Pull the front cover to the front direction to take it off.

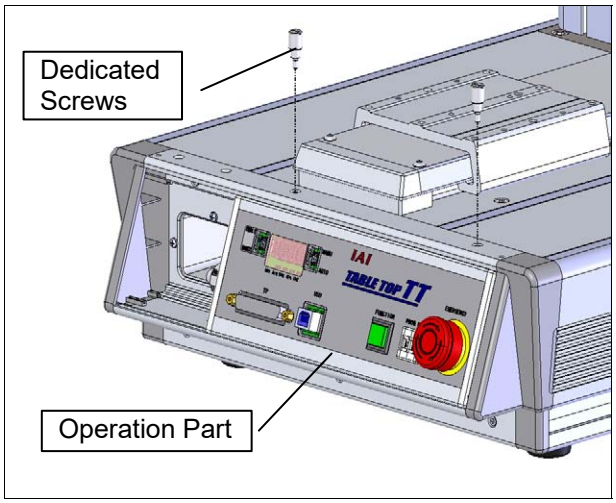

[Detaching Operation Part Step (3)]
Take off the dedicated screws (2pcs) on the operation part side.

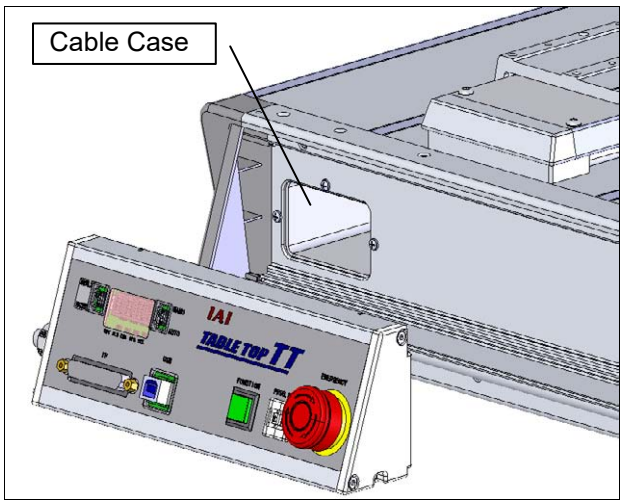

[Detaching Operation Part Step (4)]
Pull out the operation part to the front direction.

The cable to connect the operation part and the main unit is stored in the cable case.

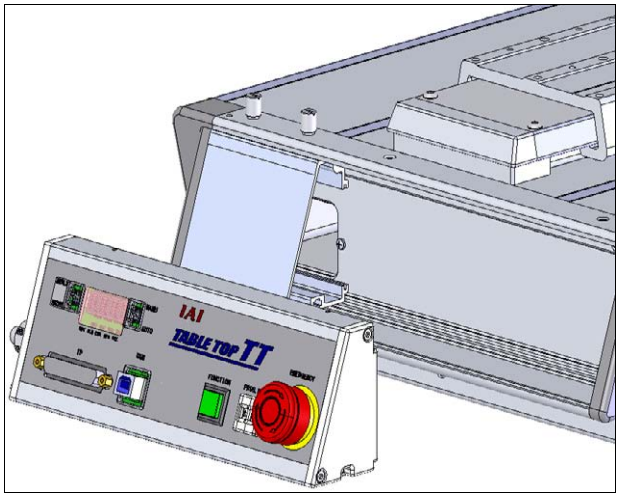

[Detaching Operation Part Step (5)]
Attach the front cover if necessary.

Chapter 3 Wiring

3.1 Wiring Diagram

Front Panel Wiring Layout



Touch Panel Teaching (Option)

Model: TB-01-S



5m

Dummy Plug

Model: DP-2

* Enclosed in global type and PC Software (IA-101-TTA-USB)



5m /3m

PC Connection Cable
(Enclosed in PC Software)
Model: CB-ST-E1MW050 (5m)
CB-SEL-USB030 (3m)
CB-ST-AIMW050 (5m)

PC Software (Option)

Model: IA-101-X-MW
IA-101-TT-USB
IA-101-X-USBMW
IA-101-XA-MW

Back Panel Wiring Layout



PLC

Variety of Field Network (Options)

CC-Link
DeviceNet
PROFIBUS
EtherNet/IP
EtherCAT

IO Flat Cable (Accessories)

Model: CB-PAC-PIO020

2m

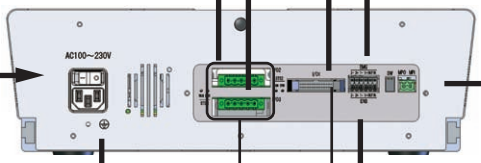



Emergency Stop Switch



Electromagnetic Contactor



Enable Switch



AC100 to 230V
Select from those below for power supply cable
- Only with plug on main unit side
- Power supply cable for 100V AC (2m)
- Power supply cable for 200V AC (2m)

Protective Grounding

Extension I/O Slot

Standard I/O Service Power Supply Connector

* Emergency stop switch, enable switch, electromagnetic contactor and other considered devices are to be in layout if necessary. Operation is available with the settings at delivery (short-circuit treatment).

3.2 Power Supply, Emergency Stop Circuit and Enable Circuit

With the wiring to the inlet and system I/O connectors, power supply circuit and safety circuit (external and built-in emergency stop circuit and external enable circuit) can be constructed.
Safety circuit is a circuit that is to be prepared to stop the robot operation manually to prevent any accident in advance when an operator gets to feed dangerous. The Machinery Directive (MD) requests Safety Category 3 or higher.
If Machinery Directive is required, refer to 3.2.2 [5] below to construct yourself an external safety circuit.
Have a strand with wire diameter 0.5mm^2 (AWG20 or equiv.) or more for those interconnection cables.

3.2.1 Pulse Motor Type

[1] Internal Circuit Composition
[Standard Specification]

- All the motor drive power supply lines are cut off by FET.
- Switchover of active/inactive on the emergency stop line on the connector for teaching can be performed with the bypass relay by detecting the connection of connector for teaching.
- Switchover of active/inactive on the enable switch line on the connector for teaching can be performed with the bypass relay by operating the mode switch.

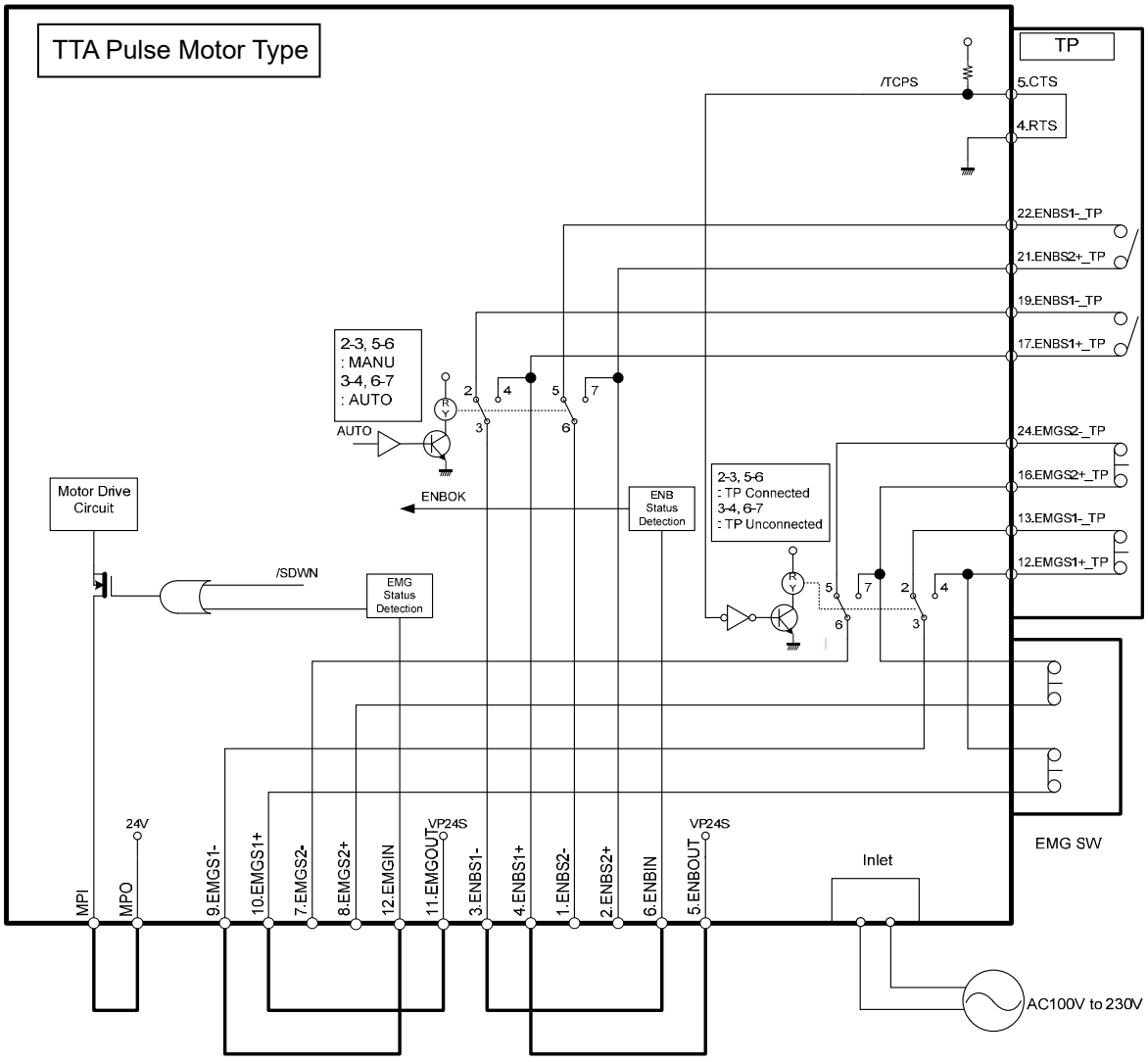

Emergency Stop, Enable Internal Circuit and External Wiring at Delevery

* 24V DC/10mA or less for EMGIN and ENBIN
* Contact output (EMGS1+/-, EMGS2+/- and ENBS2+/-) should be 30V DC/0.5A or less.

[Global Specification]

- All the motor drive power supply lines are cut off by FET.
- Because the emergency stop line on the connector for teaching and enable line are always activated, motor drive becomes available by using a dummy plug (DP-2) when the connector for teaching is not in use.

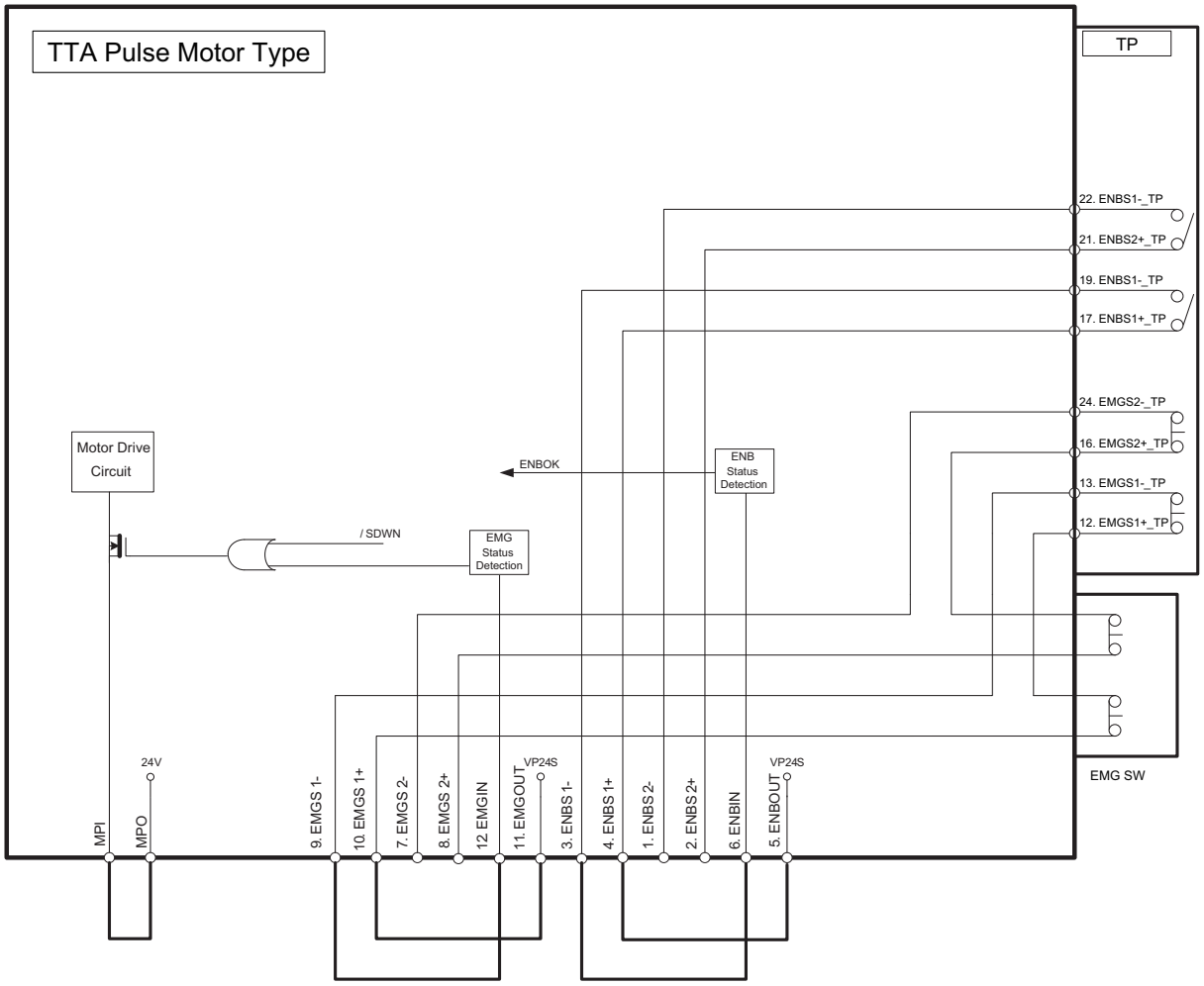

Emergency Stop, Enable Internal Circuit and External Wiring at Delevery

* 24V DC/10mA or less for EMGIN and ENBIN
* Contact output (EMGS1+/-, EMGS2+/-, ENBS1+/- and ENBS2+/-) should be 30V DC/0.5A or less.

[2] Example for Composition of Emergency Stop and Enable Circuits

Shown below is an example for how to composite the emergency stop circuit and enable circuit.

[Example for Wiring when External Switch Installed]

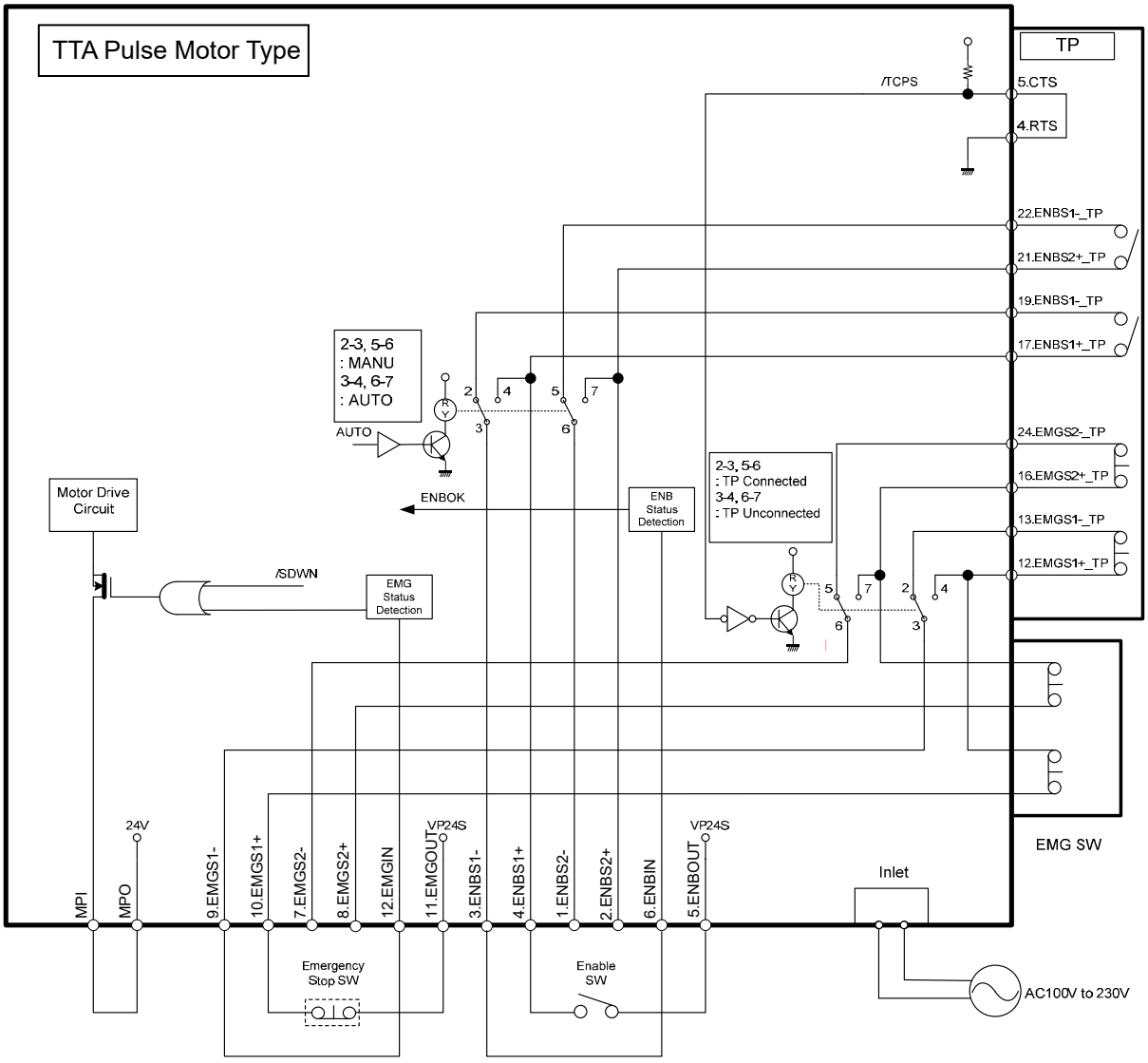

Emergency Stop and Enable Circuits: Example for Wiring when External Switch Installed

[Example for Wiring when External Switch (with Reset Switch) Installed]

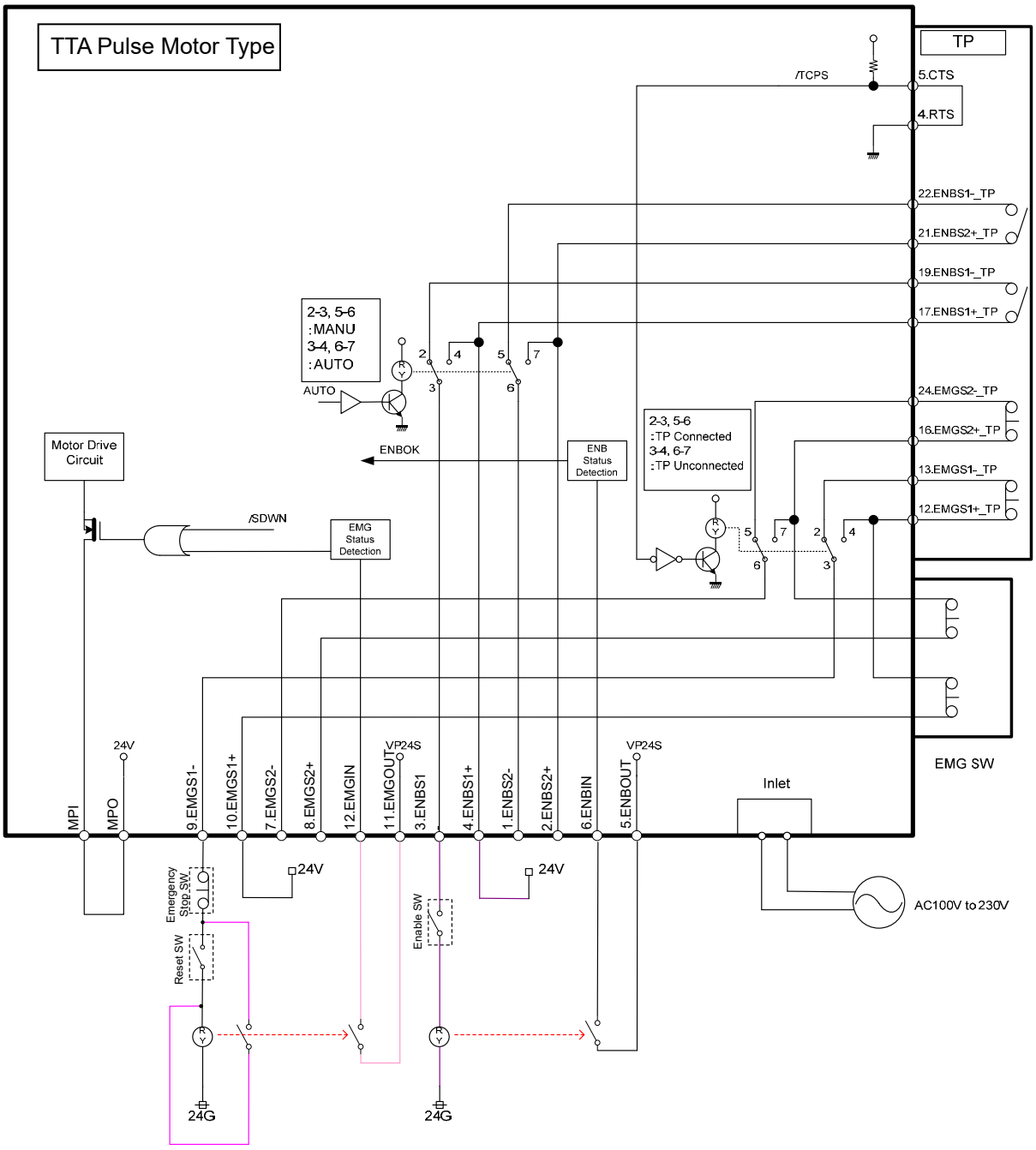

Emergency Stop and Enable Circuits: Example for Wiring when External Switch (with Reset Switch) Installed

⚠ Caution: When using DP-1 or CB-ST-E1MW050-EB, the enable line cannot construct a circuit using an external power source. If it is desired to use an external power source to the enable line, use TB-02, TB-01, SEL-T/TD or CB-ST-A1MW050-EB.

[Emergency Stop and Enable Circuits: Example for Wiring Considering Safety Category 1]

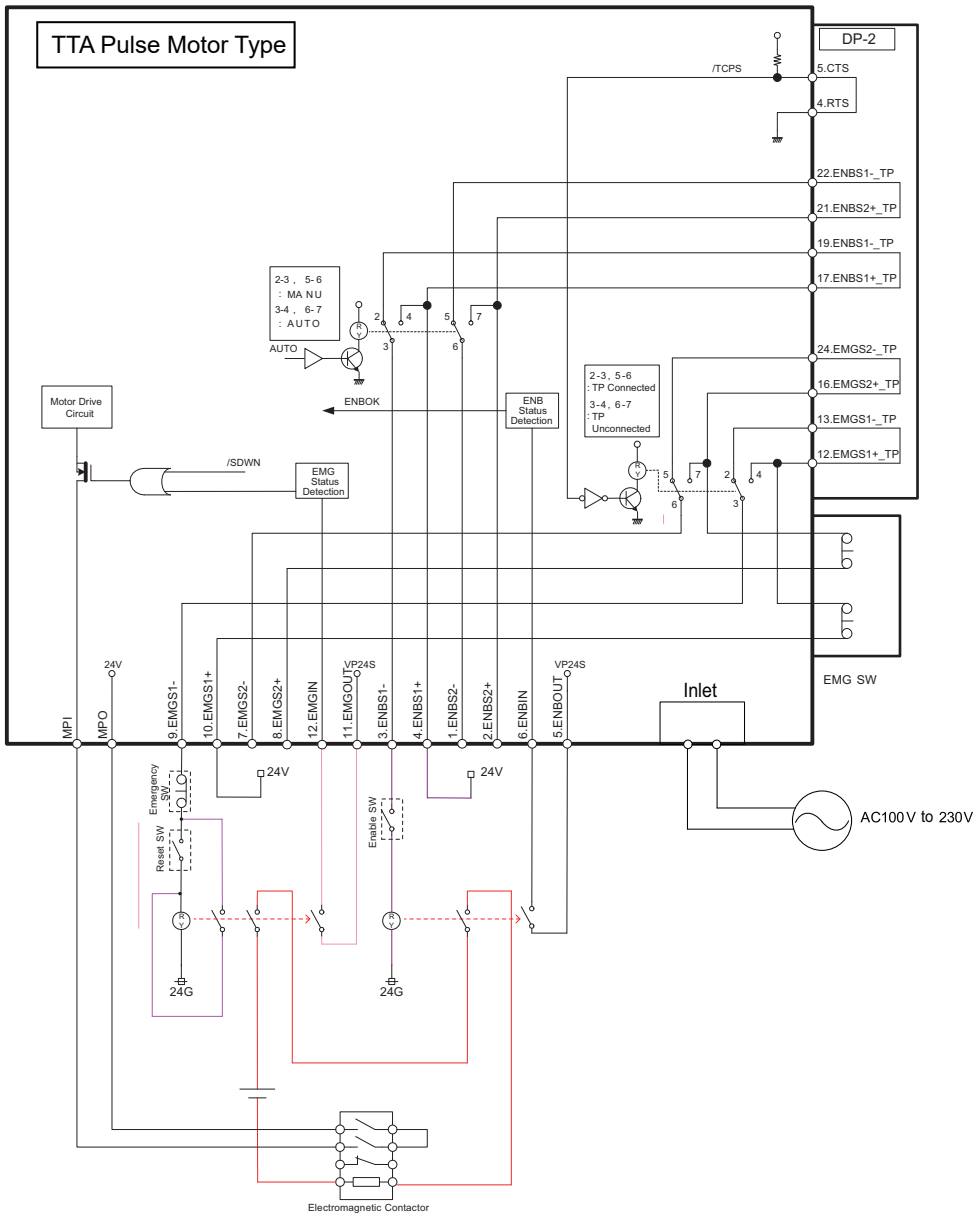

Emergency Stop and Enable Circuits: Example for Wiring Considering Safety Category 1

* Regarding the contact in connector area for teaching, there is a bypass relay connected, thus it cannot be used as a safety circuit. (It can be applicable with a special order of “with no bypass” when using a contact on the connector area for teaching. In such a case, use a dummy plug (DP-2) when the connector for teaching is not to be in use.)
* The power supply specifications between the terminals for MPO and MPI are as described below.

	Specofication
Voltage	DC24V (Built-in Power Source)
Rated Current	2-axis type: 4A, 3-axis type: 6A, 4-axis type: 8A
Peak Max. DC Current Output	2-axis type: 8A, 3-axis type: 12A, 4-axis type: 16A

⚠ Caution: When using DP-1 or CB-ST-E1MW050-EB, the enable line cannot construct a circuit using an external power source. If it is desired to use an external power source to the enable line, use TB-02, TB-01, SEL-T/TD or CB-ST-A1MW050-EB.

[Emergency Stop and Enable Circuits: Example for Wiring Considering Safety Category 2]

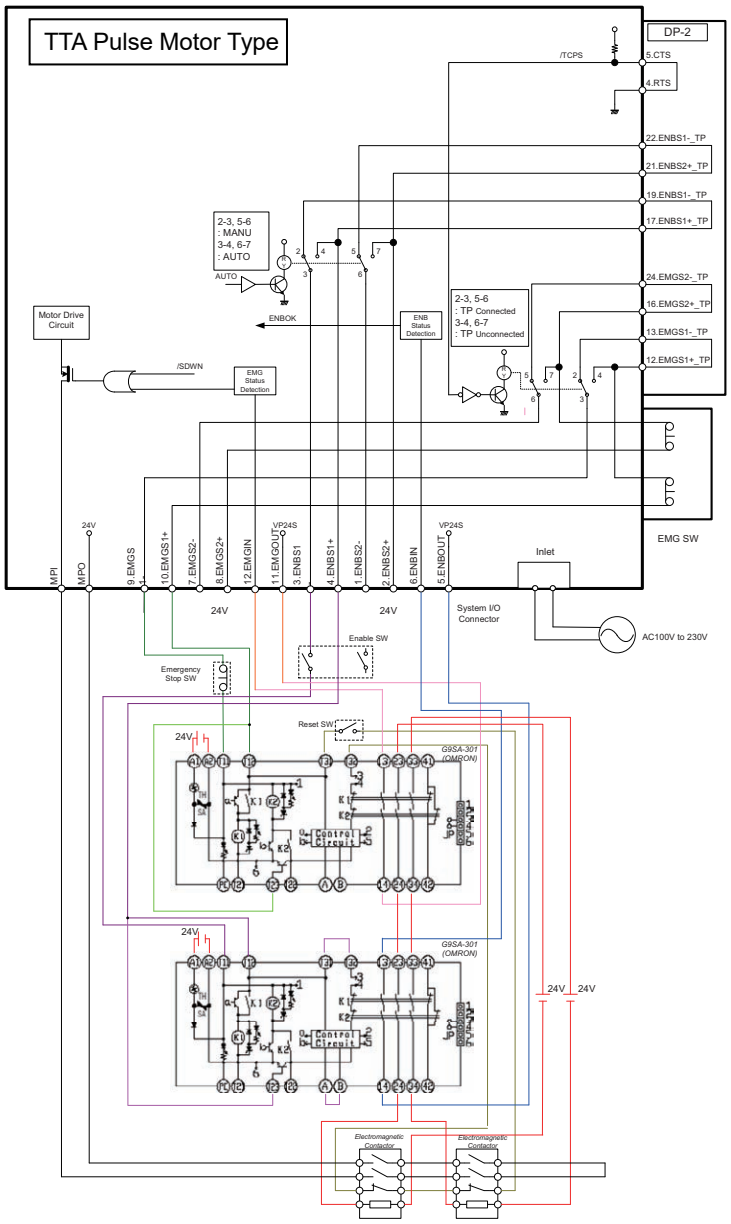

Emergency Stop and Enable Circuits: Example for Wiring Considering Safety Category 2

* Regarding the contact in connector area for teaching, there is a bypass relay connected, thus it cannot be used as a safety circuit. (It can be applicable with a special order of “with no bypass” when using a contact on the connector area for teaching. In such a case, use a dummy plug (DP-2) when the connector for teaching is not to be in use.)
* The power supply specifications between the terminals for MPO and MPI are as described below.

	Specification
Voltage	DC24V (Built-in Power Source)
Rated Current	2-axis type: 4A, 3-axis type: 6A, 4-axis type: 8A
Peak Max. DC Current Output	2-axis type: 8A, 3-axis type: 12A, 4-axis type: 16A

⚠ Caution: When using DP-1 or CB-ST-E1MW050-EB, the enable line cannot construct a circuit using an external power source. If it is desired to use an external power source to the enable line, use TB-02, TB-01, SEL-T/TD or CB-ST-A1MW050-EB.

[Emergency Stop and Enable Circuits: Example for Wiring Considering Safety Category 3]

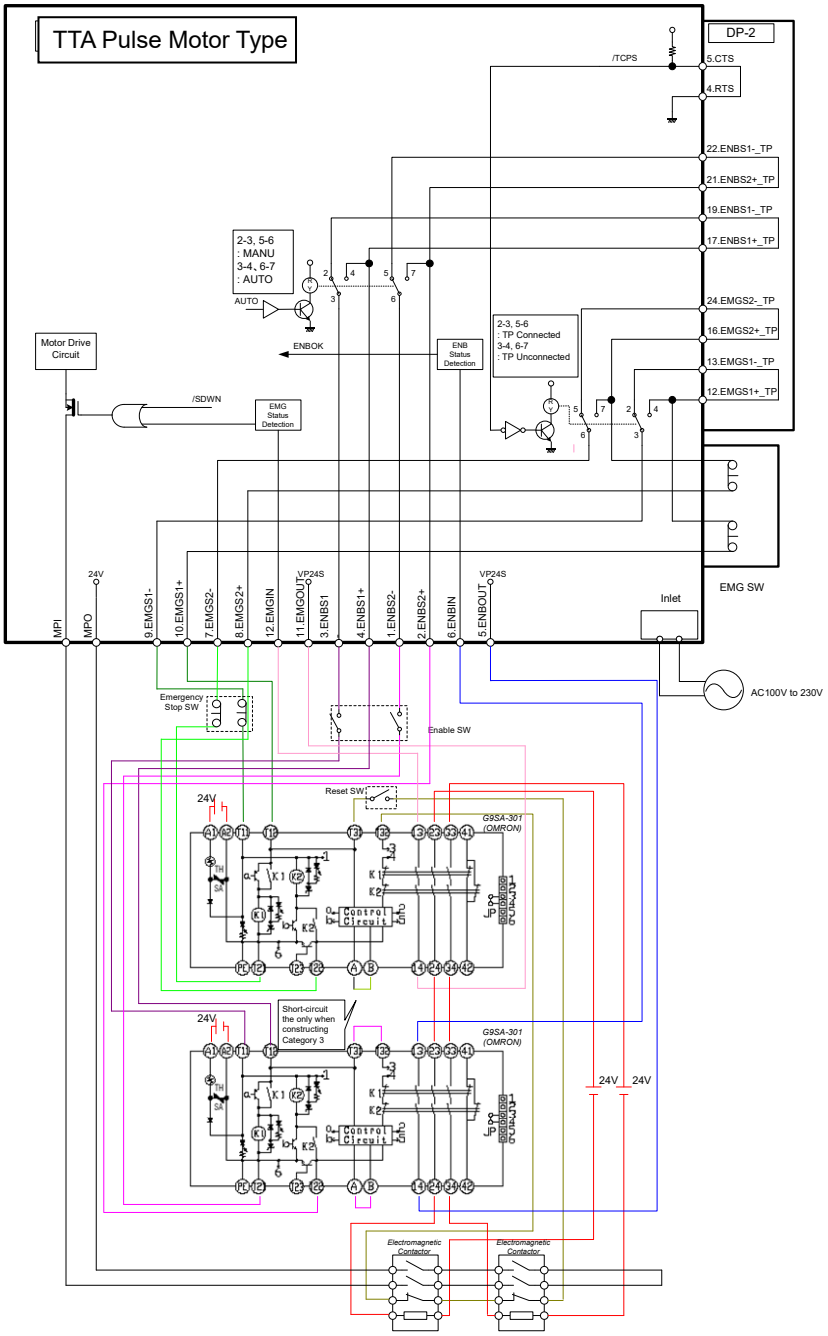

Emergency Stop and Enable Circuits: Example for Wiring Considering Safety Category 3

* Regarding the contact in connector area for teaching, there is a bypass relay connected, thus it cannot be used as a safety circuit. (It can be applicable with a special order of “with no bypass” when using a contact on the connector area for teaching. In such a case, use a dummy plug (DP-2) when the connector for teaching is not to be in use.)
* Use a duplexing PC connection cable (CB-ST-A1MW050-EB) when teaching is conducted with PC by using the connector for teaching.
* The power supply specifications between the terminals for MPO and MPI are as described below.

	Specification
Voltage	DC24V (Built-in Power Source)
Rated Current	2-axis type: 4A, 3-axis type: 6A, 4-axis type: 8A
Peak Max. DC Current Output	2-axis type: 8A, 3-axis type: 12A, 4-axis type: 16A

3.2.2 AC Servo Motor Type

[1] Internal Circuit Composition

[Standard Specification]

- All the motor drive power supply lines are cut off by FET.
- Switchover of active/inactive on the emergency stop line on the connector for teaching can be performed with the bypass relay by detecting the connection of connector for teaching.
- Switchover of active/inactive on the enable switch line on the connector for teaching can be performed with the bypass relay by operating the mode switch.

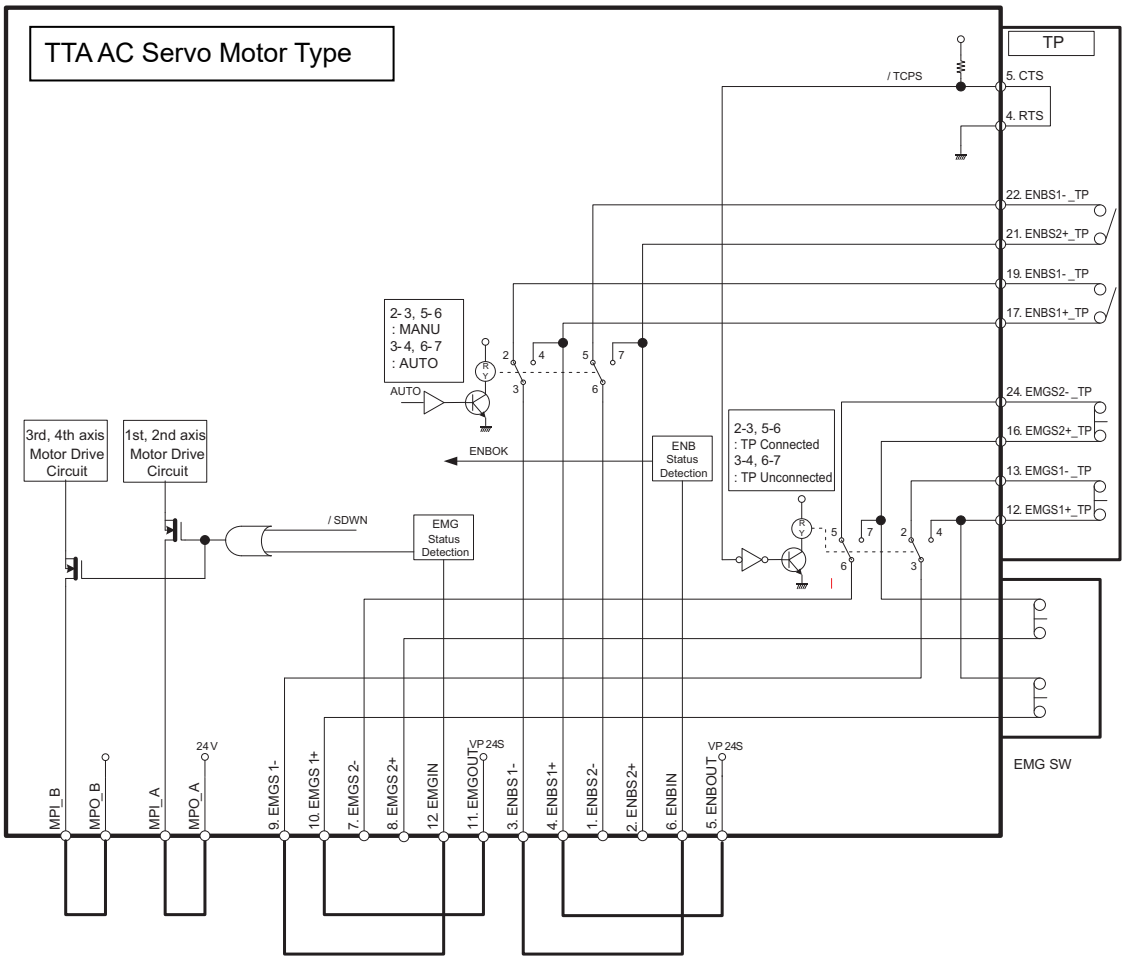

Emergency Stop, Enable Internal Circuit and External Wiring at Delevery

* 24V DC/10mA or less for EMGIN and ENBIN
* Contact output (EMGS1+/-, EMGS2+/- and ENBS2+/-) should be 30V DC/0.5A or less.

[Global Specification]

- All the motor drive power supply lines are cut off by FET.
- Because the emergency stop line on the connector for teaching and enable line are always activated, motor drive becomes available by using a dummy plug (DP-2) when the connector for teaching is not in use.

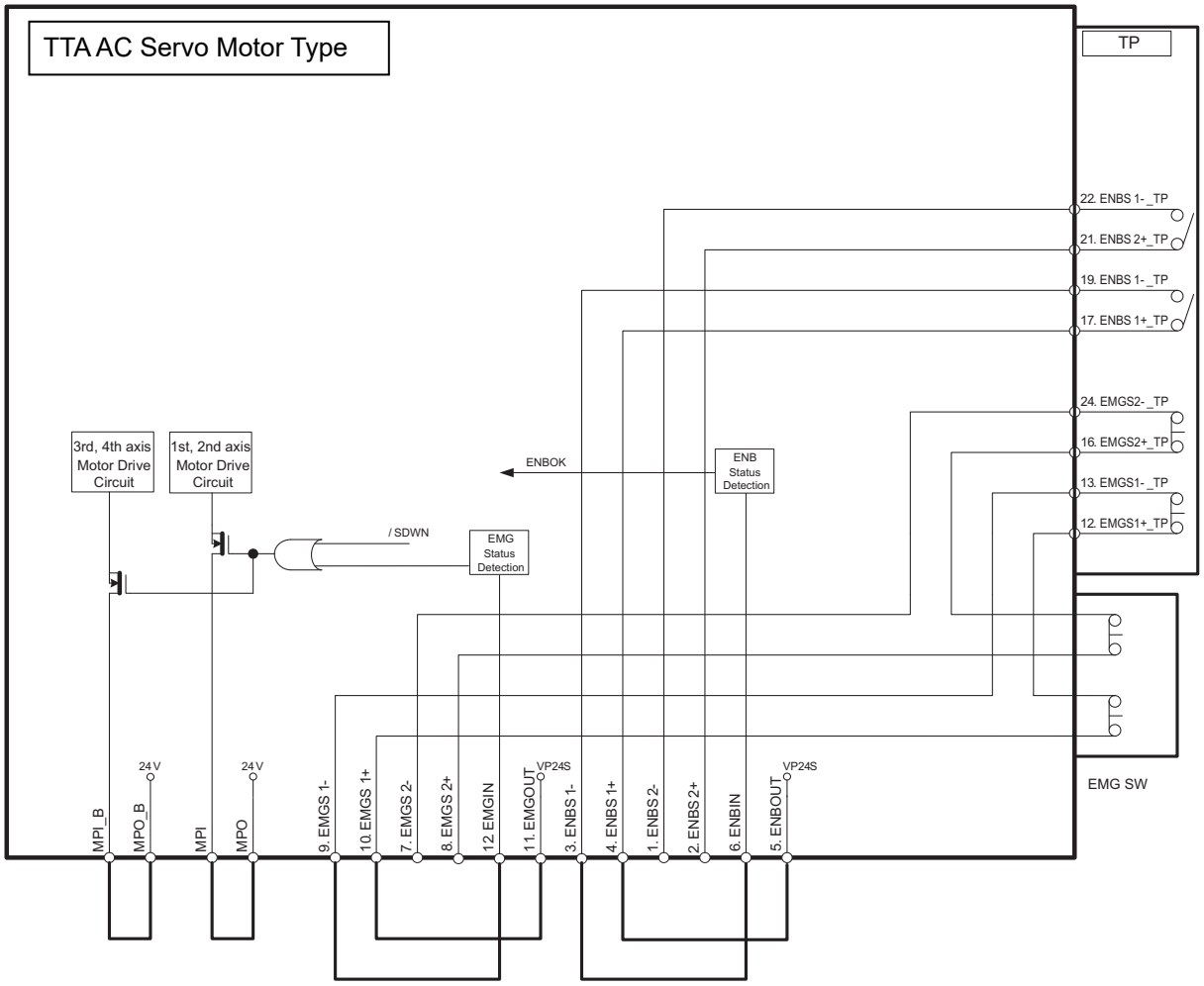

Emergency Stop, Enable Internal Circuit and External Wiring at Delevery

* 24V DC/10mA or less for EMGIN and ENBIN
* Contact output (EMGS1+/-, EMGS2+/- and ENBS2+/-) should be 30V DC/0.5A or less.

[2] Example for Composition of Emergency Stop and Enable Circuits

Shown below is an example for how to composite the emergency stop circuit and enable circuit.

[Example for Wiring when External Switch Installed (Standard Specification)]

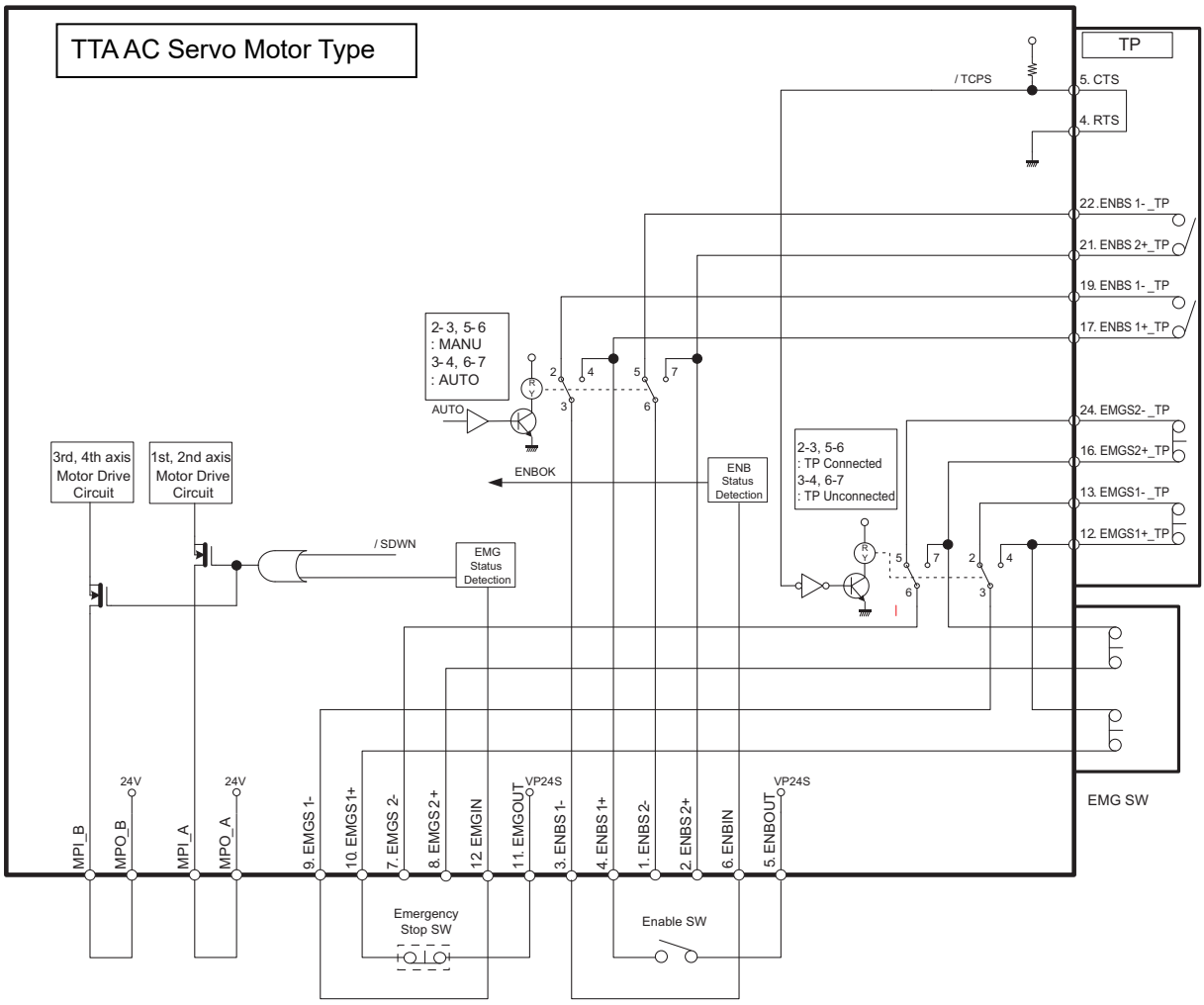

Emergency Stop and Enable Circuits: Example for Wiring when External Switch Installed (Standard Specification)

> ⚠ Caution: When using DP-1 or CB-ST-E1MW050-EB, the enable line cannot construct a circuit using an external power source. If it is desired to use an external power source to the enable line, use TB-02, TB-01, SEL-T/TD or CB-ST-A1MW050-EB.

[Example for Wiring when External Switch (with Reset Switch) Installed (Standard Specification)]

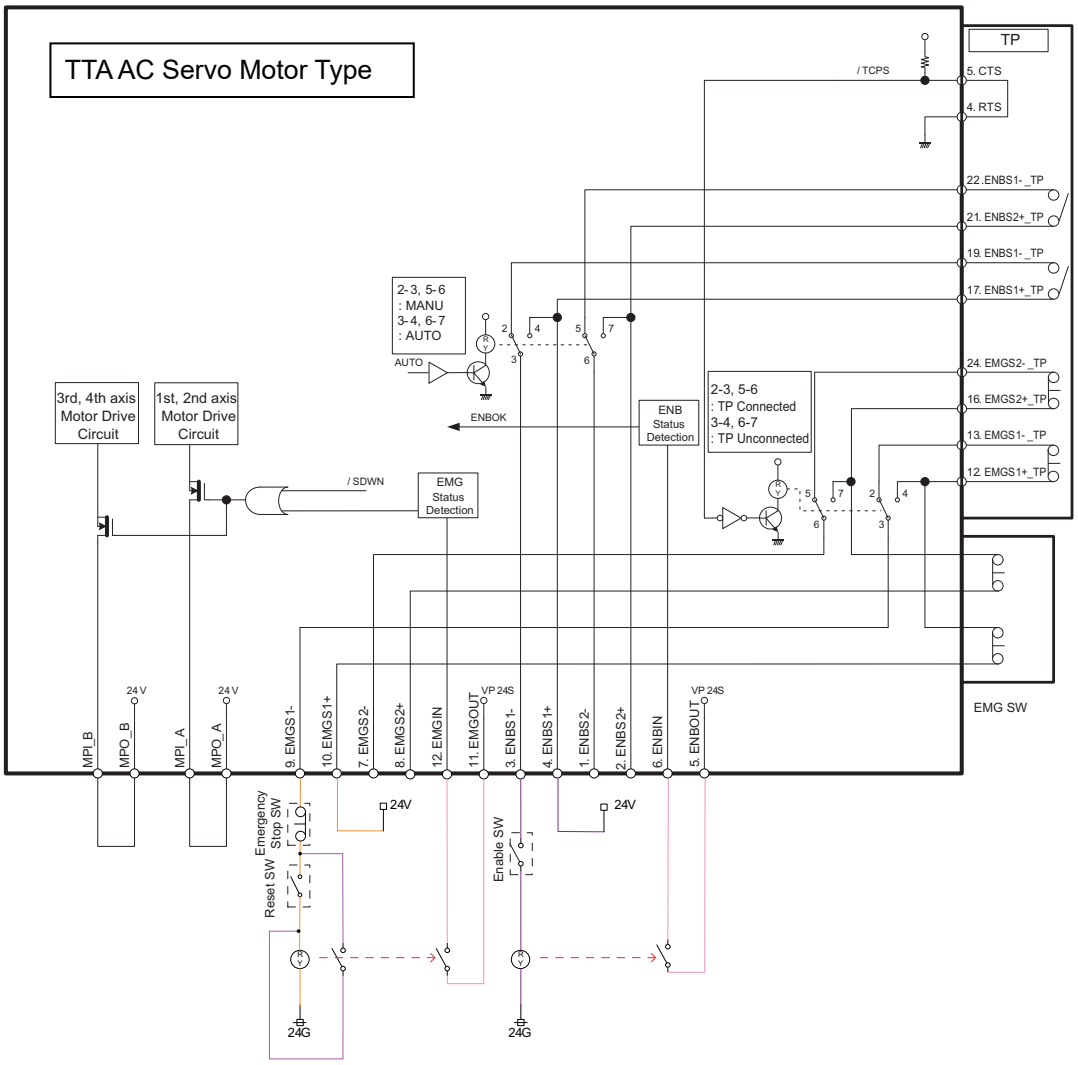

Emergency Stop and Enable Circuits: Example for Wiring when External Switch (with Reset Switch) Installed (Standard Specification)

> ⚠ Caution: When using DP-1 or CB-ST-E1MW050-EB, the enable line cannot construct a circuit using an external power source. If it is desired to use an external power source to the enable line, use TB-02, TB-01, SEL-T/TD or CB-ST-A1MW050-EB.

[Emergency Stop and Enable Circuits: Example for Wiring Considering Safety Category 1 (Global Specification)]

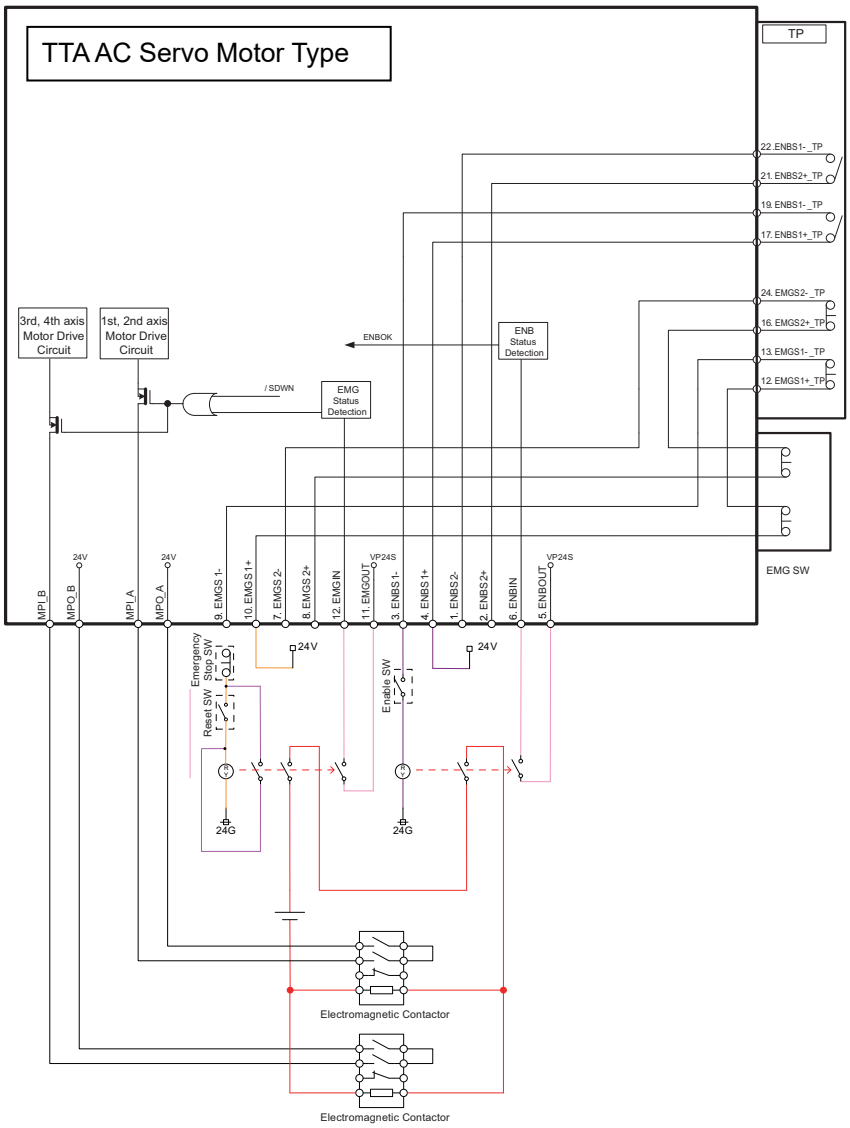

Emergency Stop and Enable Circuits: Example for Wiring Considering Safety Category 1 (Global Specification)

* Use a dummy plug (DP-2) when the connector for teaching is not to be in use.
* The power supply specifications between the terminals for MPO_A and MPI_A and between MPO_B and MPI_B are as described below.

	Specification
Voltage	DC24V (Built-in Power Source)
Rated Current	2-axis type: MPO_A 7A, MPO_B 0A 3-axis type: MPO_A 7A, MPO_B 4A 4-axis type: MPO_A 7A, MPO_B 8A
Peak Max. DC Current Output	2-axis type: MPO_A 16A, MPO_B 0A 3-axis type: MPO_A 16A, MPO_B 8A 4-axis type: MPO_A 16A, MPO_B 16A

⚠ Caution: When using DP-1 or CB-ST-E1MW050-EB, the enable line cannot construct a circuit using an external power source. If it is desired to use an external power source to the enable line, use TB-02, TB-01, SEL-T/TD or CB-ST-A1MW050-EB.

[Emergency Stop and Enable Circuits: Example for Wiring Considering Safety Category 2 (Global Specification)]

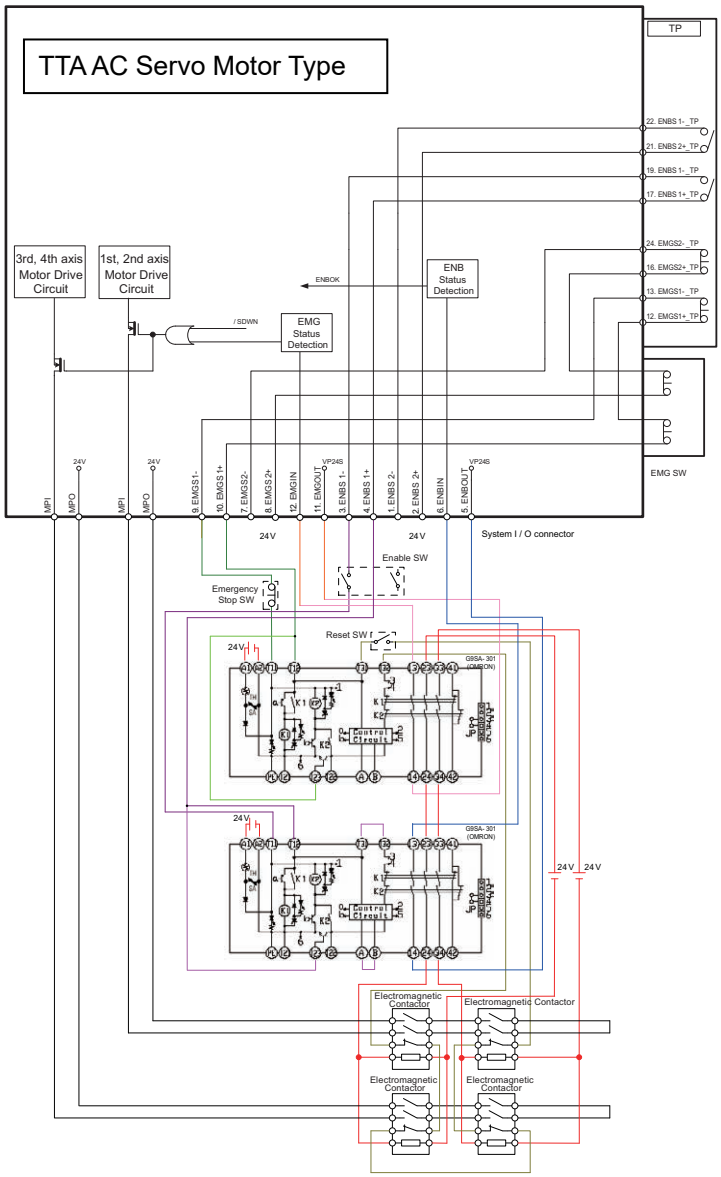

Emergency Stop and Enable Circuits: Example for Wiring Considering Safety Category 2 (Global Specification)

* Use a dummy plug (DP-2) when the connector for teaching is not to be in use.
* The power supply specifications between the terminals for MPO_A and MPI_A and between MPO_B and MPI_B are as described below.

	Specification
Voltage	DC24V (Built-in Power Source)
Rated Current	2-axis type: MPO_A 7A, MPO_B 0A 3-axis type: MPO_A 7A, MPO_B 4A 4-axis type: MPO_A 7A, MPO_B 8A
Peak Max. DC Current Output	2-axis type: MPO_A 16A, MPO_B 0A 3-axis type: MPO_A 16A, MPO_B 8A 4-axis type: MPO_A 16A, MPO_B 16A

⚠ Caution: When using DP-1 or CB-ST-E1MW050-EB, the enable line cannot construct a circuit using an external power source. If it is desired to use an external power source to the enable line, use TB-02, TB-01, SEL-T/TD or CB-ST-A1MW050-EB.

[Emergency Stop and Enable Circuits: Example for Wiring Considering Safety Category 3 (Global Specification)]

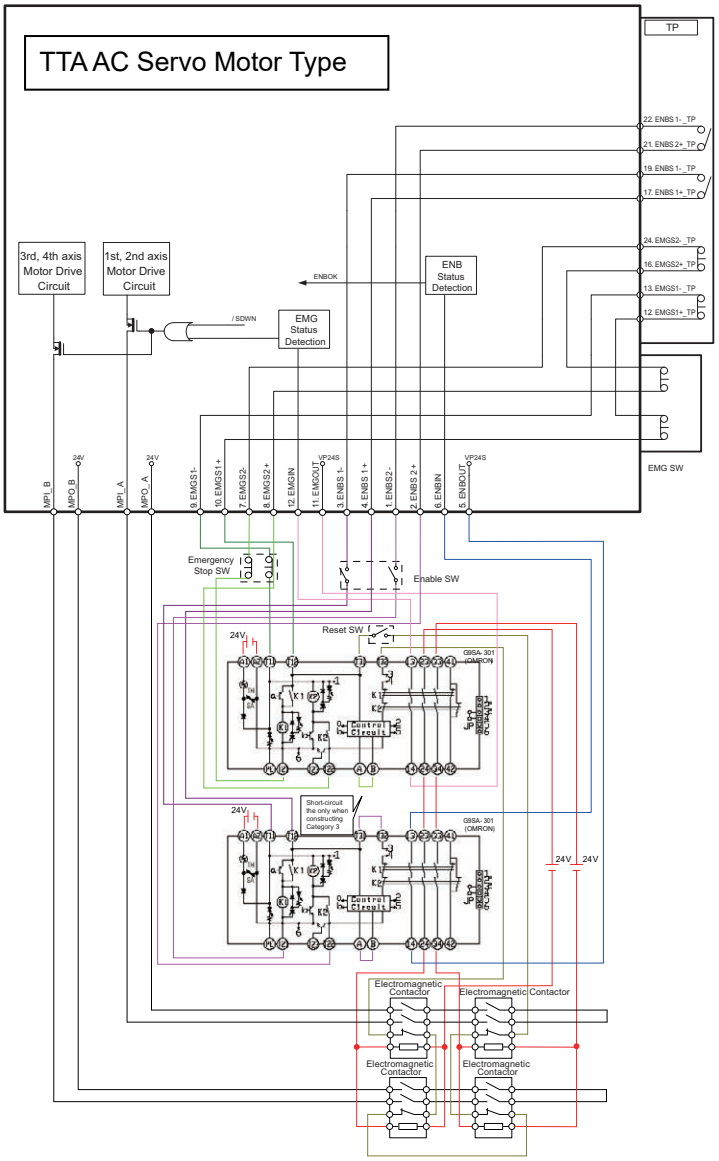

Emergency Stop and Enable Circuits: Example for Wiring Considering Safety Category 3 (Global Specification)

* Use a dummy plug (DP-2) when the connector for teaching is not to be in use.
* The power supply specifications between the terminals for MPO_A and MPI_A and between MPO_B and MPI_B are as described below.

	Specification
Voltage	DC24V (Built-in Power Source)
Rated Current	2-axis type: MPO_A 7A, MPO_B 0A 3-axis type: MPO_A 7A, MPO_B 4A 4-axis type: MPO_A 7A, MPO_B 8A
Peak Max. DC Current Output	2-axis type: MPO_A 16A, MPO_B 0A 3-axis type: MPO_A 16A, MPO_B 8A 4-axis type: MPO_A 16A, MPO_B 16A

⚠ Caution: When using DP-1 or CB-ST-E1MW050-EB, the enable line cannot construct a circuit using an external power source. If it is desired to use an external power source to the enable line, use TB-02, TB-01, SEL-T/TD or CB-ST-A1MW050-EB.

3.2.3 Safety Circuit Timing Charts for TTA (Pulse Motor, Servo Motor)

Safety circuit timing charts are shown below.
The timings covered by the timing charts are as follows: [1], “Power on,” [2], “Emergency stop,” [3], ”Power on during emergency stop,” [4], “Enable input,” [5], “System-shutdown level error,” [6], “Cold-start level error,” [7], ”Operation-cansellation level error”

[1] Power on

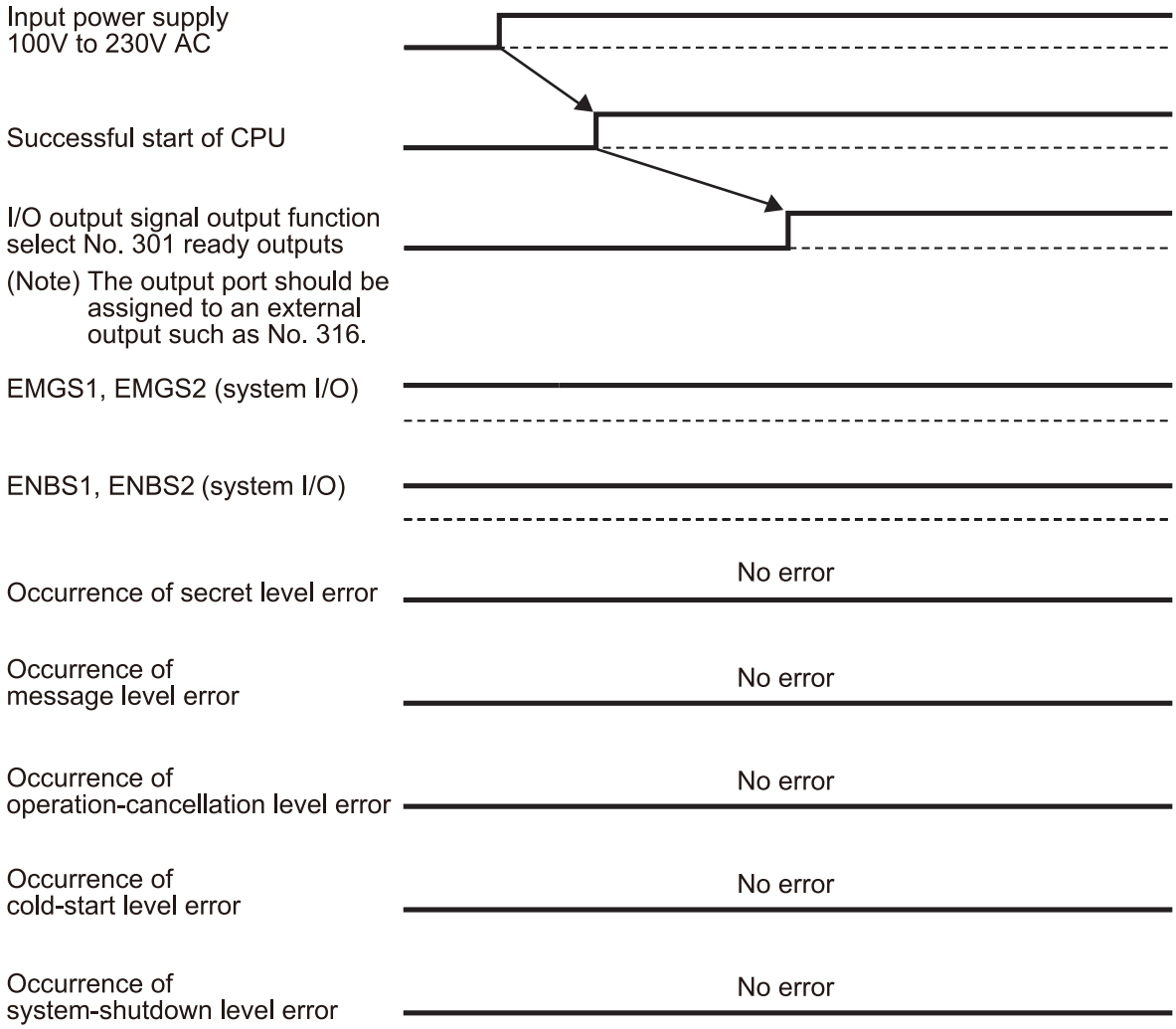

The drive-source cutoff reset input is not used.
I/O parameter No. 47 = 3: Output function 301 = READY output (PIO program can be run and error of cold-start level or higher is not present).

[2] Emergency stop

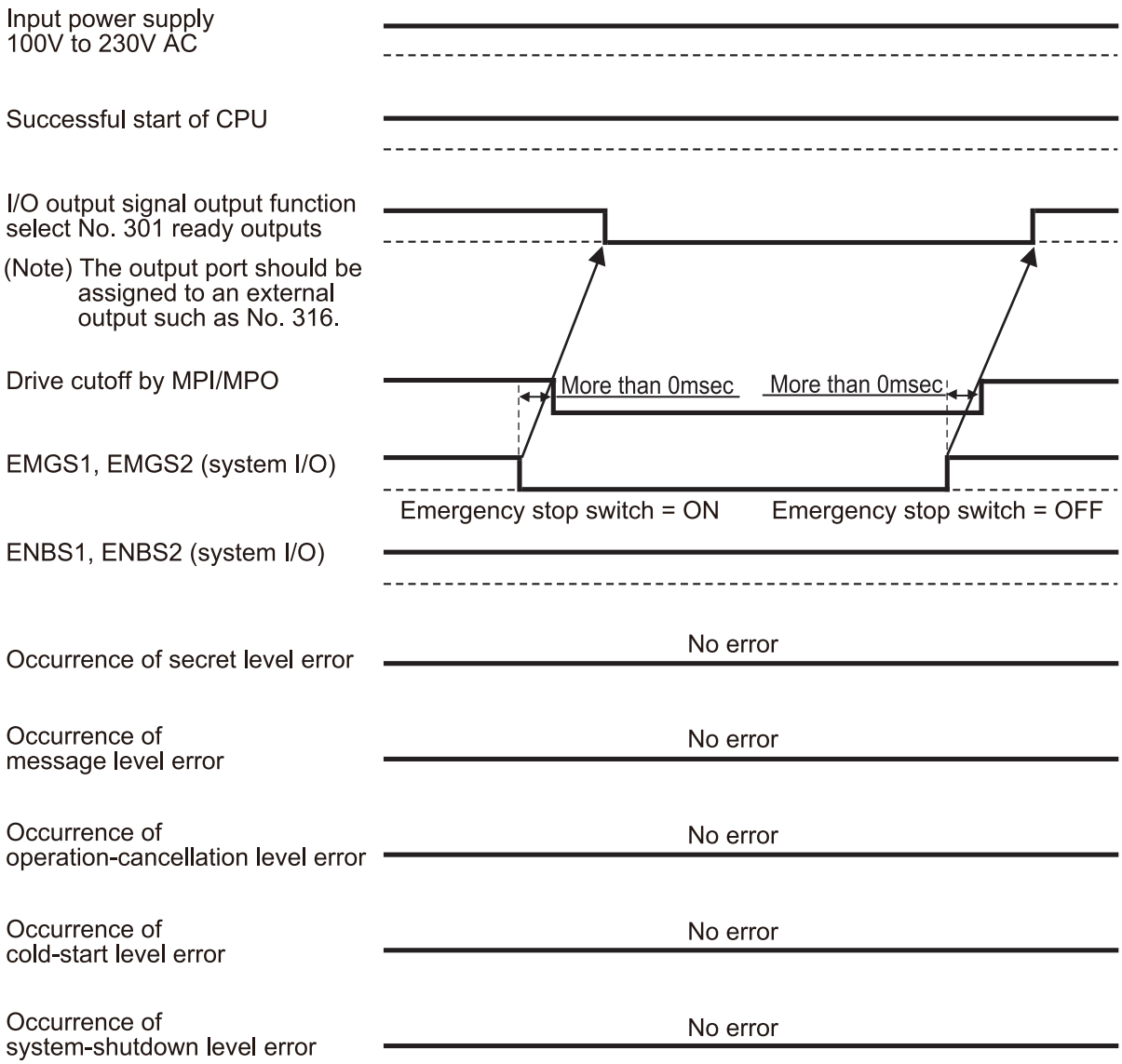

The drive-source cutoff reset input is not used.
I/O parameter No. 47 = 3: Output function 301 = READY output (PIO program can be run and error of cold-start level or higher is not present).

[3] Power on during emergency stop

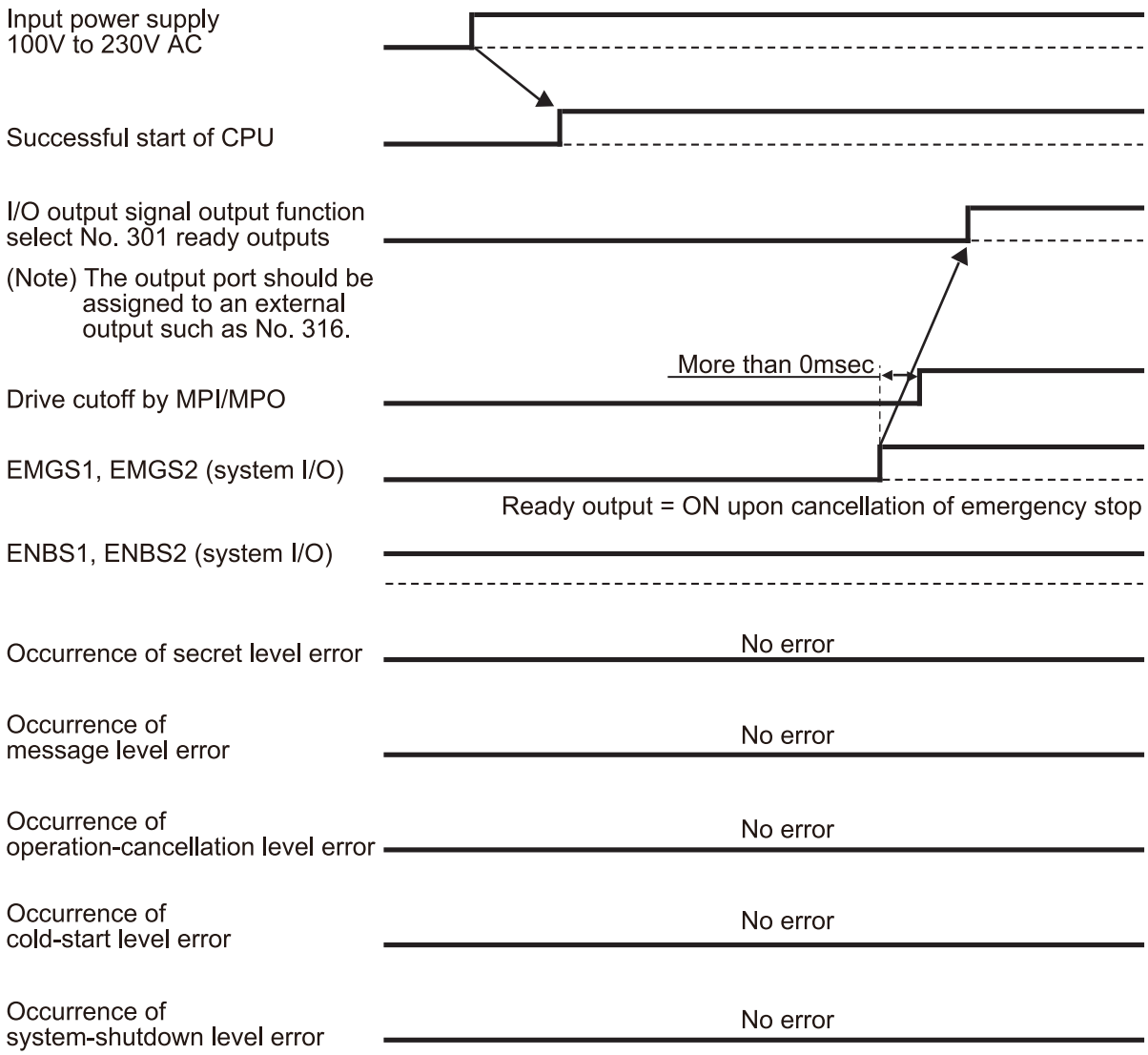

Virtually the same timing chart is applicable when the power is turned on without enable input.

The drive-source cutoff reset input is not used.
I/O parameter No. 47 = 3: Output function 301 = READY output (PIO program can be run and error of cold-start level or higher is not present).

[4] Enable input

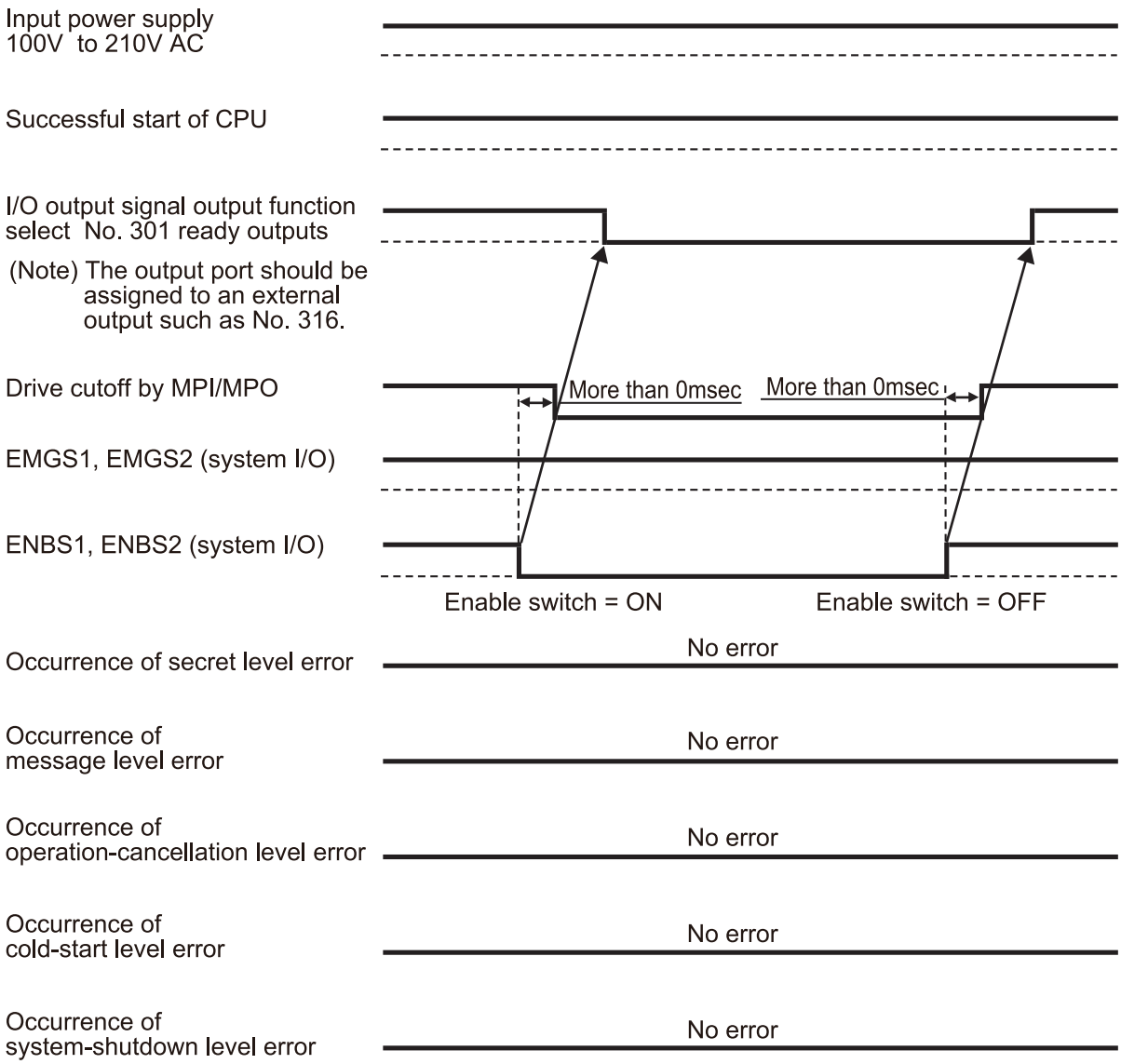

The drive-source cutoff reset input is not used.
I/O parameter No. 47 = 3: Output function 301 = READY output (PIO program can be run and error of cold-start level or higher is not present).

[5] System-shutdown level error

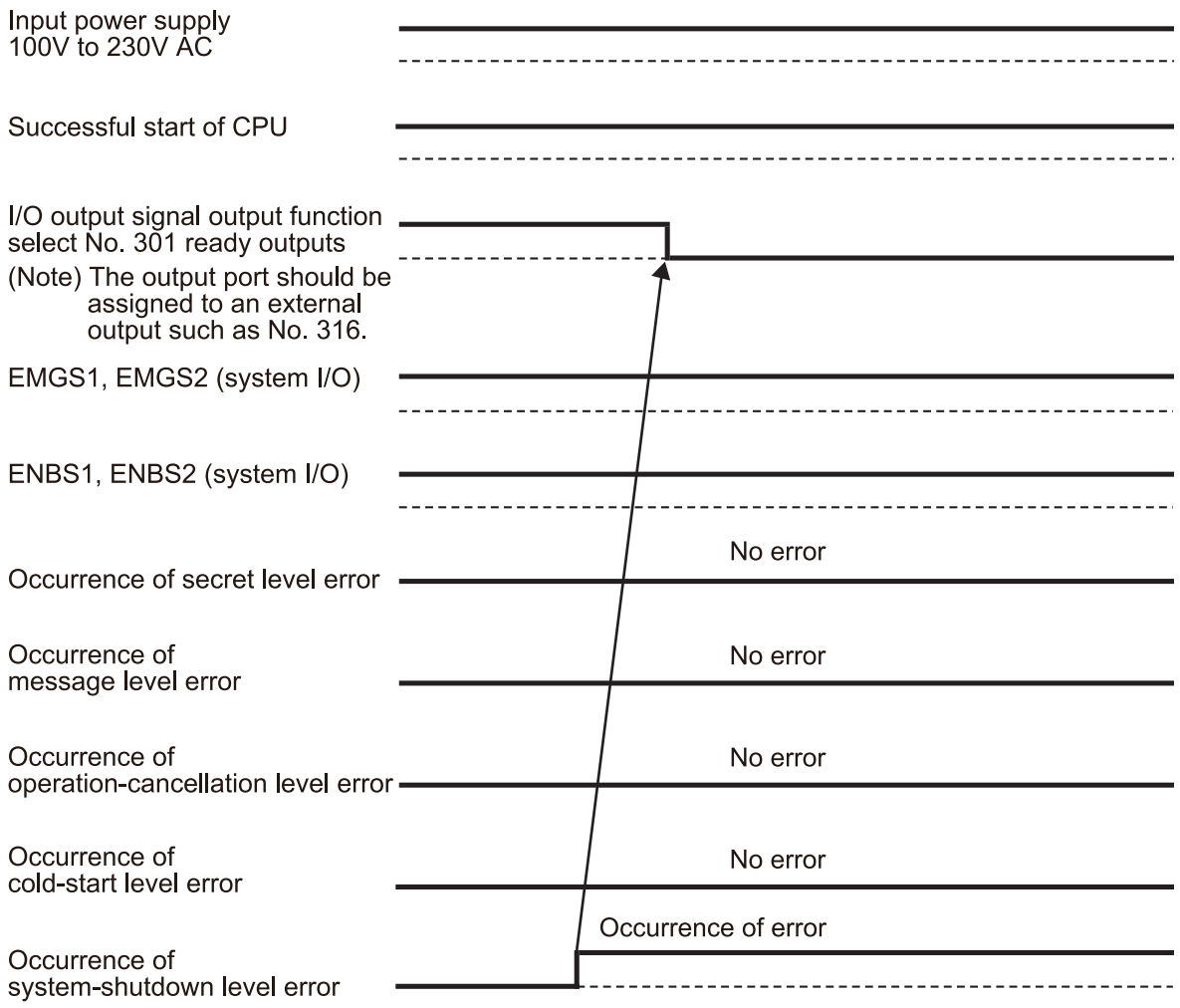

The drive-source cutoff reset input is not used.
I/O parameter No. 47 = 3: Output function 301 = READY output (PIO program can be run and error of cold-start level or higher is not present).

[6] Cold-start level error

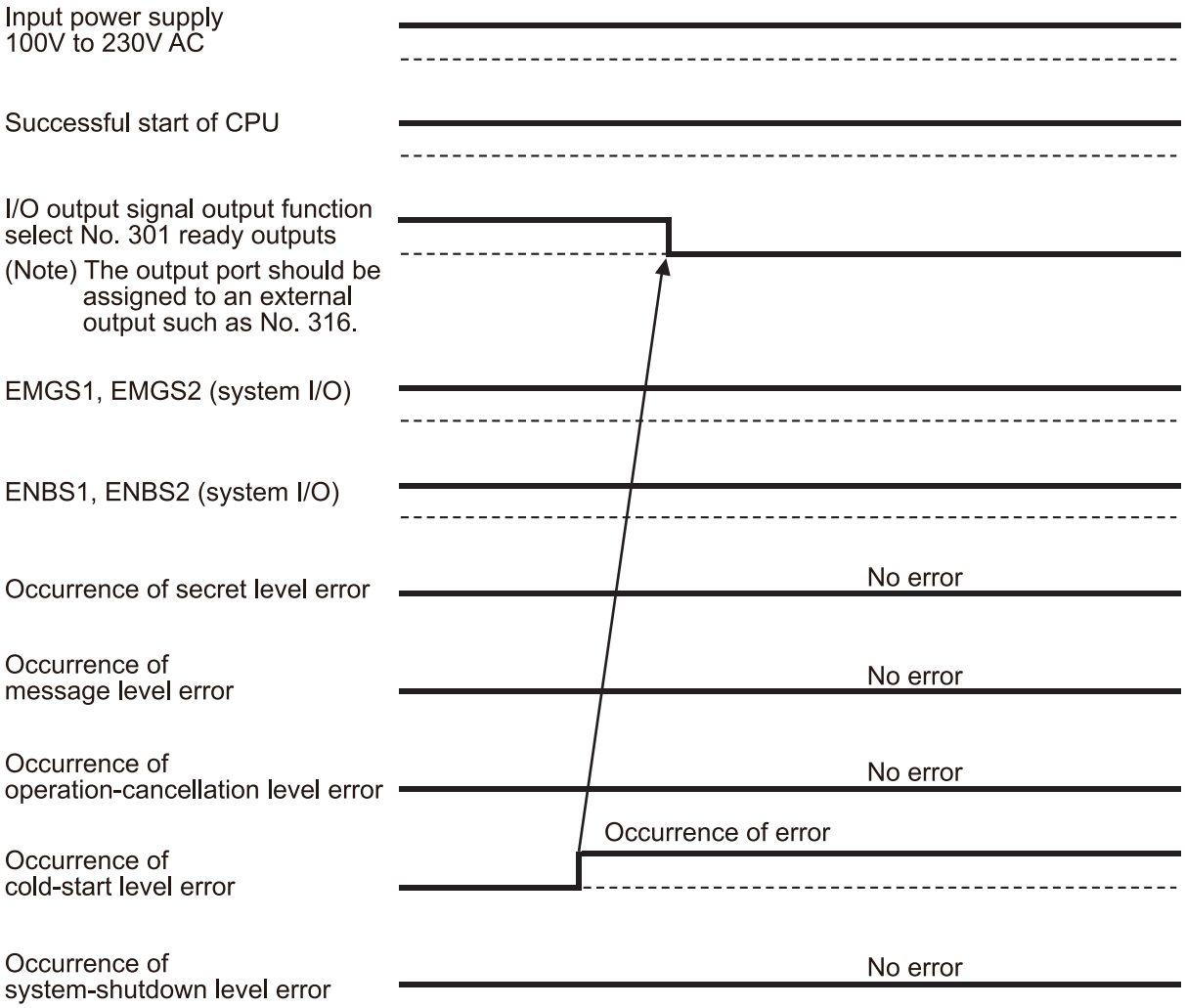

The drive-source cutoff reset input is not used.
I/O parameter No. 47 = 3: Output function 301 = READY output (PIO program can be run and error of cold-start level or higher is not present).

[7] Operation-cancellation level error

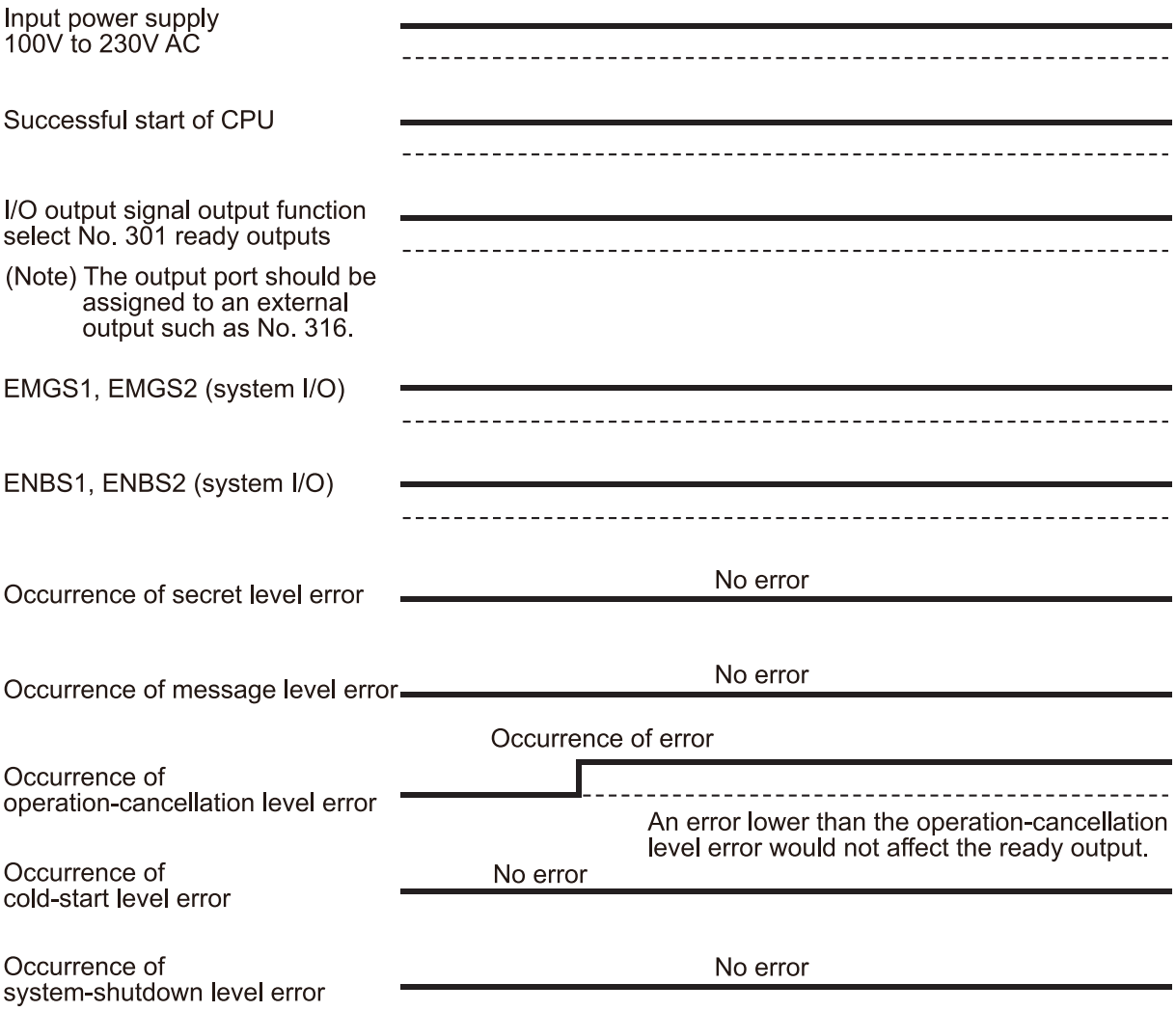

The drive-source cutoff reset input is not used.
I/O parameter No. 47 = 3: Output function 301 = READY output (PIO program can be run and error of cold-start level or higher is not present).

3.3 IO Circuit

3.3.1 Input and Output Ports Assignment Specification

Shown below are the I/O port numbers and the function set at delivery of this product.
I/O port can change its function by I/O parameters.
The functions described in brackets ( ) are not set at the delivery.

Type	Port No.	Function	Type	Port No.	Function
Internal Input	000	Program Start	Internal Output	300	ALM (LED on the front panel)
	001	Switch No. 1 (Additional switch), (Software reset)		301	RDY (LED on the front panel)
	002	(Servo ON)		302	EMG (LED on the front panel)
	003	(Startup of auto start program)		303	Automatic operation mode (Start switch LED)
	004	(Software interlock)		304	HPS (LED on the front panel)
	005	Switch No. 2 (Additional switch), (Pause reset)		305	System reservation
	006	Switch No. 3 (Additional switch), (Pause)		306	System reservation
	007	Program number specification Ones place of the digital switch		307	System reservation
	008			308	Internal DI No. 001 ON/OFF
	009			309	Internal DI No. 002 ON/OFF
	010			310	Internal DI No. 003 ON/OFF
	011	Program number specification Tens place of the digital switch		311	Internal DI No. 004 ON/OFF
	012			312	Internal DI No. 005 ON/OFF
	013			313	Internal DI No. 006 ON/OFF
	014			314	System reservation
	015	Switch No. 4 (Additional switch), (Home return, etc.)		315	Internal DI No. 015 ON/OFF
External Input	016 to 031	General-purpose input (Standard I/O Connector (I/O1))	External Output	316 to 331	General-purpose output (Standard I/O Connector (I/O1))
Internal Input	032	System reservation	Internal Output	332	7-segment user display digit specification
	033			333	7-segment user display digit specification
	034			334	System reservation
	035			335	System reservation
	036			336	System reservation
	037			337	7-segment display refresh
	038			338	7-segment user/system alternate display
	039			339	7-segment user display specification
	040			340	DT0 (7-segment user display bit)
	041			341	DT1 (7-segment user display bit)
	042			342	DT2 (7-segment user display bit)
	043			343	DT3 (7-segment user display bit)
	044			344	DT4 (7-segment user display bit)
	045			345	DT5 (7-segment user display bit)
	046			346	DT6 (7-segment user display bit)
	047			347	System reservation
External Input	048 to 299 (Note 1)	General-purpose input • Field network • Extension DIO (Extension I/O slot 1(I/O2)) (Extension I/O slot 2(I/O3))	External Output	348 to 599 (Note 1)	General-purpose output • Field network • Extension DIO (Extension I/O slot 1(I/O2)) (Extension I/O slot 2(I/O3))

(Note 1) The input and output port numbers are:

Input 000 to 299 (300 points max.)
Output 300 to 599 (300 points max.)

◎ Coution for I/O Assignment of Switches from Switch No. 1 (Additional Switch) to Switch No. 4 (Additional Switch)

Switch No. 1 (additional switch) should be connected to Port No. 001 and assigned.
Therefore, if the setting of Input Function Select 001 in I/O Parameter No. 31 is 0, general-porpose input, the switch should be for the general-porpose input.
If the setting of Input Function Select 001 in I/O Parameter No. 31 is set to 1, software reset, the switch should be for the software reset.
(When the setting of Input Function Select 001 Physical Input Port Number in I/O Parameter No. 284 has not changed from that at the delivery, and the physical input port is set to No. 001)
Also, Output Port No. 308 is connected to Input Port No. 001.
Be aware that, if Output Port No. 308 is turned on, Input Port No. 001 also turns on even though Switch No. 1 (additional seitch) is not pressed.
The relations between each additional switch and port numbers are as described below.

Switch	Port No.	Input Function Select	Connected Output Port No.	Remark
Switch No. 1 (Additional switch)	001	I/O Parameter No. 31 0: General-porpose input 1: Software reset	308	When the setting of Input Function Select 001 Physical Input Port Number in I/O Parameter No. 284 has not changed from that at the delivery, and the physical input port is set to No. 001
Switch No. 2 (Additional switch)	005	I/O Parameter No.35 0: General-porpose input 1: Operation-pause reset signal (ON edge)	311	When the setting of Input Function Select 005 Physical Input Port Number in I/O parameter No. 288 has not changed from that at the delivery, and the physical input port is set to No. 005
Switch No. 3 (Additional switch)	006	I/O Parameter No. 36 0: General-porpose input 1: Operation-pause reset signal (OFF level)	312	When the setting of Input Function Select 006 Physical Input Port Number in I/O Parameter No. 289 has not changed from that at the delivery, and the physical input port is set to No. 006
Switch No. 4 (Additional switch)	015	I/O Parameter No. 45 0: General-porpose input 1: All effective axes homing (ON edge) 2: Home return of all valid incremental axes (ON edge)	315	When the setting of Input Function Select 015 Physical Input Port Number in I/O Parameter No. 298 has not changed from that at the delivery, and the physical input port is set to No. 015

3.3.2 I/O Assignment Parameter List

Set the assigned input port start number and assigned output port start number to IO Parameter No. 16, 17 and 233, 234.

• I/O Parameter

No.	Parameter name	Default value (Reference)	Input range	Unit	Remarks
1	I/O port assignment type	0	0 ~ 20		0: Fixed assignment
16	Input port start number at I/O2 affixed assignment	-1	-1 ~ 299		0 + (Multiple of 8) (Invalid if a negative value is set)
17	Output port start number at I/O2 affixed assignment	-1	-1 ~ 599		300 + (Multiple of 8) (Invalid if a negative value is set)
18	I/O2 error monitor	1	0 ~ 5		0: Do not monitor 1: Monitor * Some exceptions apply.
20	Input filtering periods	2	1 ~ 9	msec	Input signal is recognized when the status is held for twice the period set by this parameter.
120	Network attribute 1	640001H	0H ~ FFFFFFFFH		Bits 28 to 31: Input port data select at I/O2 fieldbus link error (0: Clear, 1: Hold)
121	Network attribute 2	C80000H	0H ~ FFFFFFFFH		Bits 8 to 11: Input port data select at I/O3 fieldbus link error (0: Clear, 1: Hold)
225	Extension I/O control	0H	Reference only		Bits 0 to 3: I/O2 Module Type (0: Not mounted 1: CC-Link, 2: DeviceNet, 3: PROFIBUS, 4 to 6: System reservation 7: EtherNet/IP, 8: System reservation 9: PIO) Bits 4 to 7: I/O3 Module Type (0: Not mounted 1: I CC-Link, 2: DeviceNet, 3: PROFIBUS, 4 to 6: System reservation 7: EtherNet/IP, 8: System reservation 9: PIO) * EtherNet/IP is unavailable for 2-piece mount at same time
233	Input port start number at I/O3 affixed assignment	-1	-1 ~ 299		0 + (Multiple of 8) (Invalid if a negative value is set)
234	Output port start number at I/O3 affixed assignment	-1	-1 ~ 599		300 + (Multiple of 8) (Invalid if a negative value is set)
235	I/O3 error monitor	1	0 ~ 5		0: Do not monitor 1: Monitor * Some exceptions apply.

* I/O Parameter No. 20 “Input Filtering Frequency” is in common with I/O1.

3.3.3 Example for Parameter Settings at Delivery

• When I/O2 is Mounted

No.	Parameter name	Default value (Reference)	Input range	Unit	Remarks
1	I/O port assignment type	0	0 ~ 20		0: Fixed assignment
16	Input port start number at I/O2 affixed assignment	48	-1 ~ 299		0 + (Multiple of 8) (Invalid if a negative value is set)
17	Output port start number at I/O2 affixed assignment	348	-1 ~ 599		300 + (Multiple of 8) (Invalid if a negative value is set)
18	I/O2 error monitor	1	0 ~ 5		0: Do not monitor 1: Monitor * Some exceptions apply.
20	Input filtering periods	2	1 ~ 9	msec	Input signal is recognized when the status is held for twice the period set by this parameter.
120	Network attribute 1	640001H	0H ~ FFFFFFFFH		Bits 28 to 31: Input port data select at I/O2 fieldbus link error (0: Clear, 1: Hold)
225	Extension I/O control	*9H	Reference only		Bits 0 to 3: I/O2 Module Type (0: Not mounted 1: CC-Link, 2: DeviceNet, 3: PROFIBUS, 4 to 6: System reservation 7: EtherNet/IP, 8: System reservation 9: PIO) Bits 4 to 7: I/O3 Module Type (0: Not mounted 1: I CC-Link, 2: DeviceNet, 3: PROFIBUS, 4 to 6: System reservation 7: EtherNet/IP, 8: System reservation 9: PIO) * EtherNet/IP is unavailable for 2-piece mount at same time

* Bit 4 to 7 in I/O Parameter No. 225 varies the setting values depending on the status of I/O3 mount.

• When I/O3 is Mounted

No.	Parameter name	Default value (Reference)	Input range	Unit	Remarks
1	I/O port assignment type	0	0 ~ 20		0: Fixed assignment
121	Network attribute 2	C80000H	0H ~ FFFFFFFFH		Bits 8 to 11: Input port data select at I/O3 fieldbus link error (0: Clear, 1: Hold)
225	Extension I/O control	*9H	Reference only		Bits 0 to 3: I/O2 Module Type (0: Not mounted 1: CC-Link, 2: DeviceNet, 3: PROFIBUS, 4 to 6: System reservation 7: EtherNet/IP, 8: System reservation 9: PIO) Bits 4 to 7: I/O3 Module Type (0: Not mounted 1: I CC-Link, 2: DeviceNet, 3: PROFIBUS, 4 to 6: System reservation 7: EtherNet/IP, 8: System reservation 9: PIO) * EtherNet/IP is unavailable for 2-piece mount at same time
233	Input port start number at I/O3 affixed assignment	160	-1 ~ 299		0 + (Multiple of 8) (Invalid if a negative value is set)
234	Output port start number at I/O3 affixed assignment	460	-1 ~ 599		300 + (Multiple of 8) (Invalid if a negative value is set)
235	I/O3 error monitor	1	0 ~ 5		0: Do not monitor 1: Monitor * Some exceptions apply.

* Bit 0 to 3 in I/O Parameter No. 225 varies the setting values depending on the status of I/O2 mount.

3.3.4 Standard I/O

[1] When Service Power Supply Switch is ON (Internal Power Source)
NPN Connection

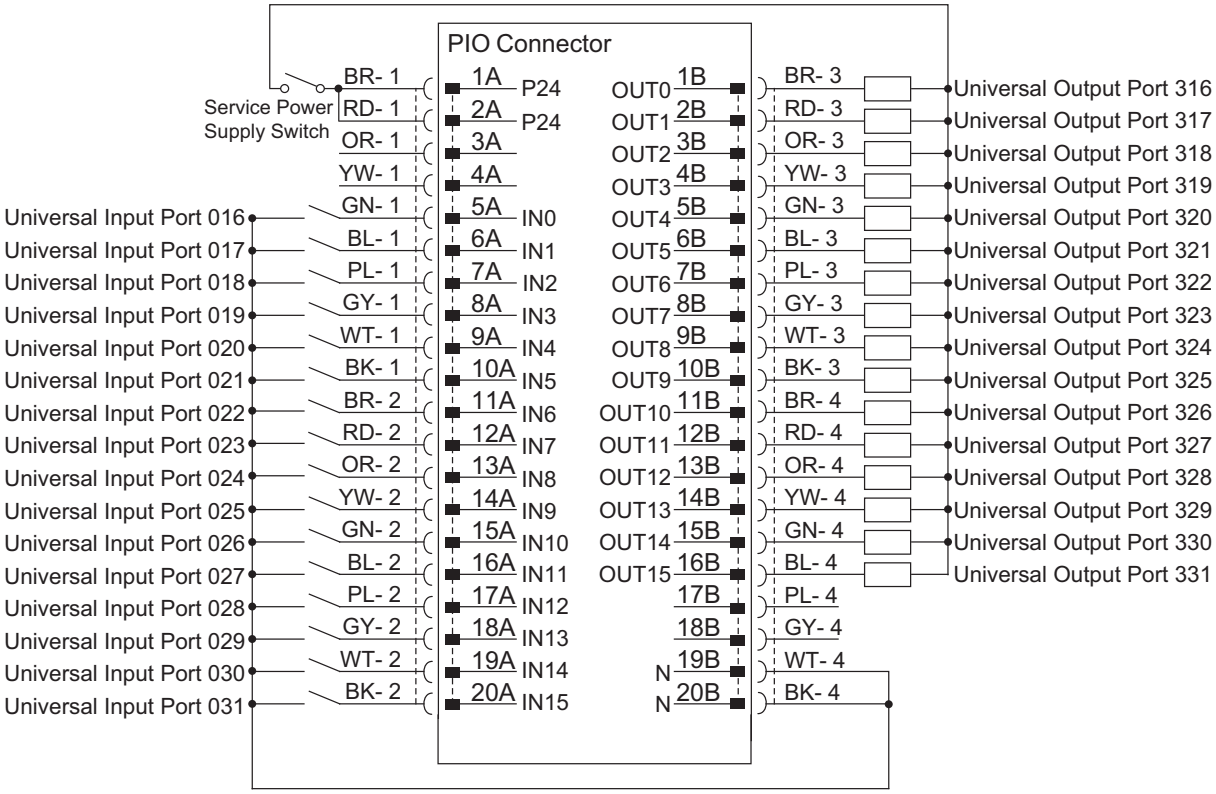

- Use the attached cable for the I/O connection.
  Model : CB-PAC-PIO□□□ (□□□ indicates the cable length L. Example. 020 = 2m)

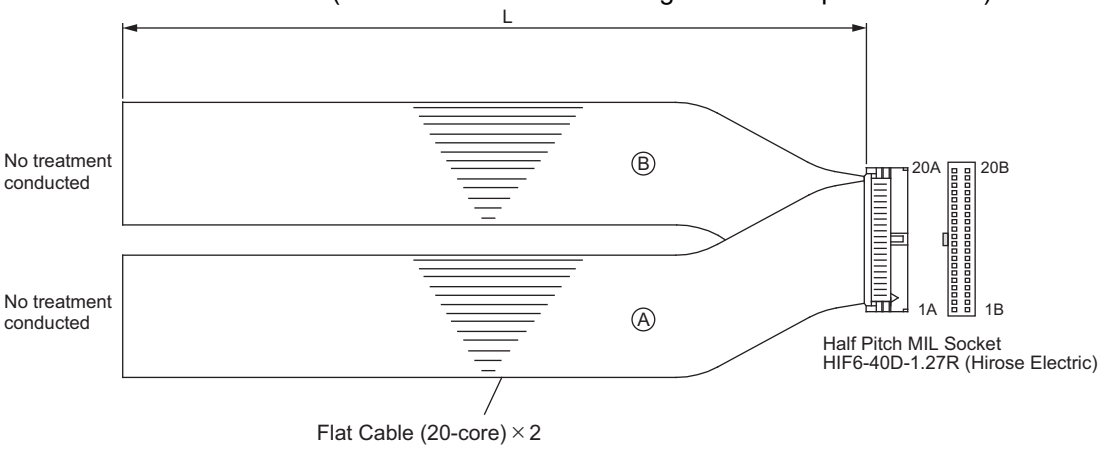

[2] When Service Power Supply Switch is ON (Internal Power Source)
PNP Connection

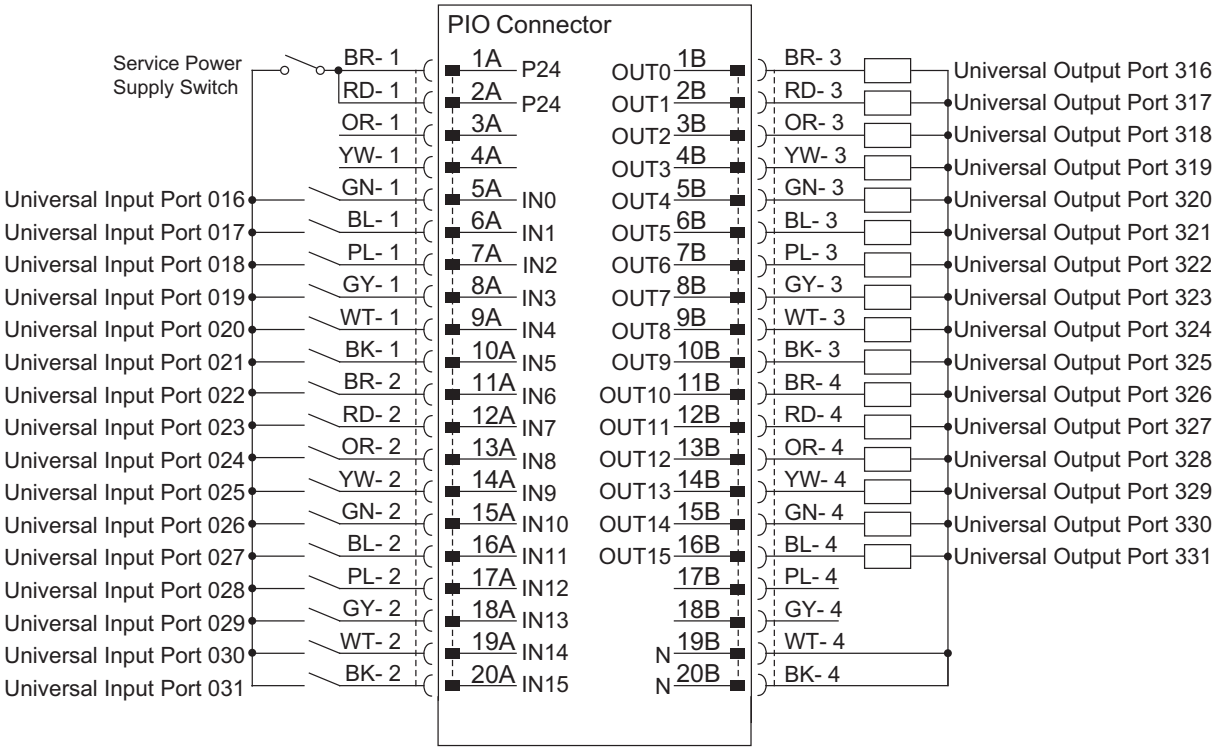

- Use the attached cable for the I/O connection.
  Model : CB-PAC-PIO□□□ (□□□ indicates the cable length L. Example. 020 = 2m)

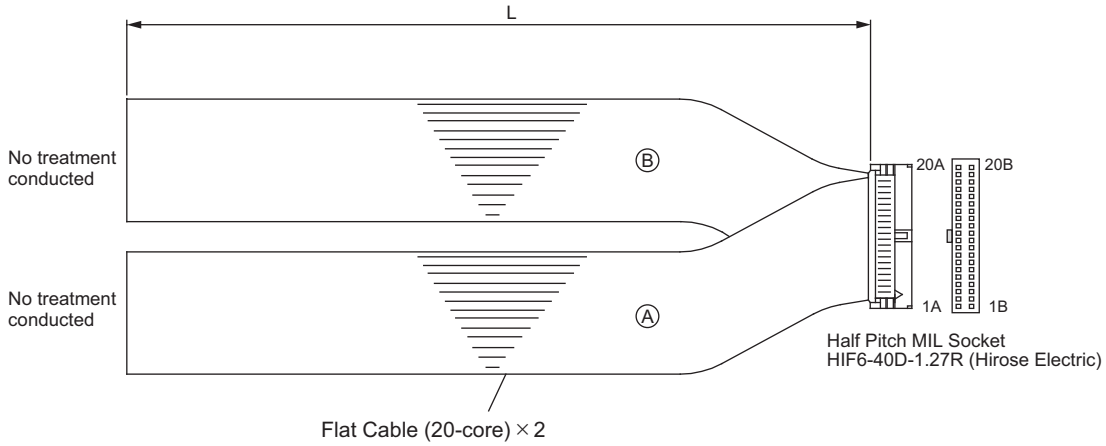

[3] When Service Power Supply Switch is OFF (External Power Source)

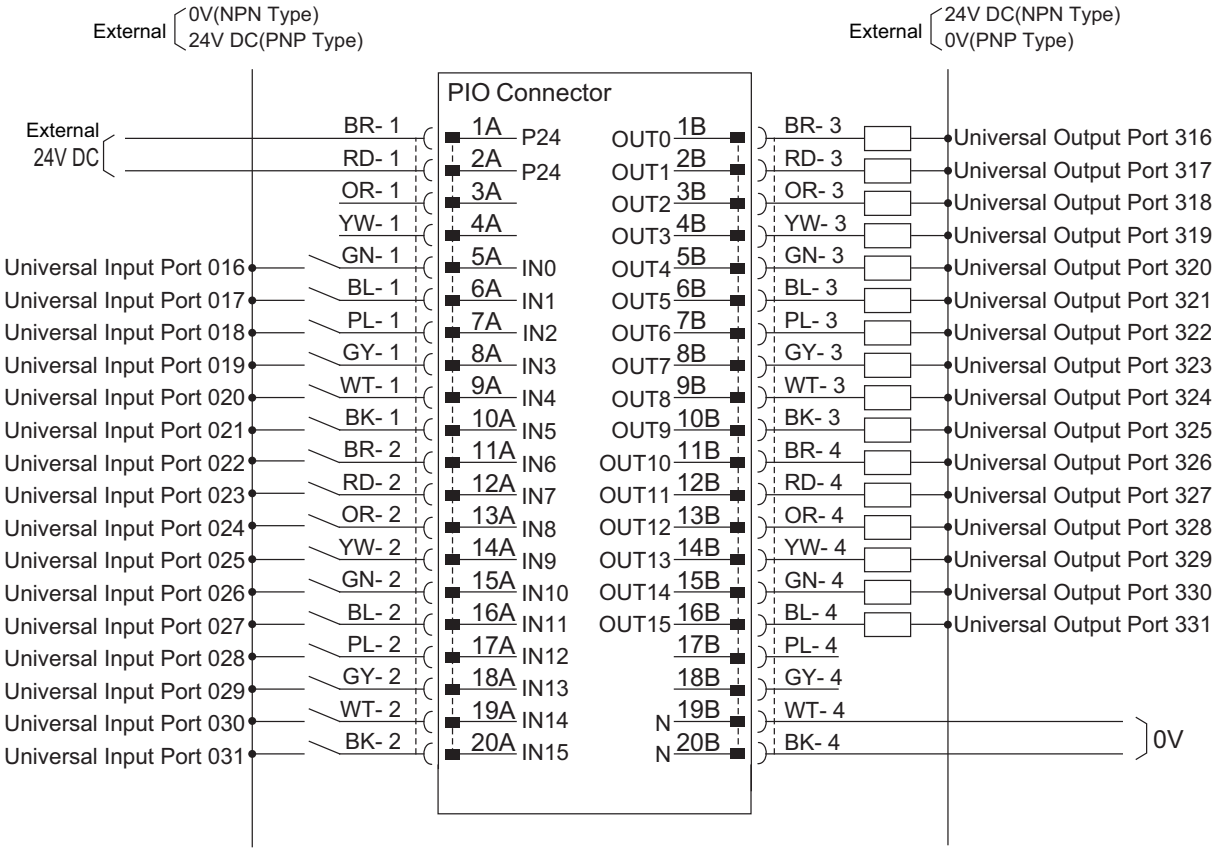

- Use the attached cable for the I/O connection.
  Model : CB-PAC-PIO□□□ (□□□ indicates the cable length L. Example. 020 = 2m)

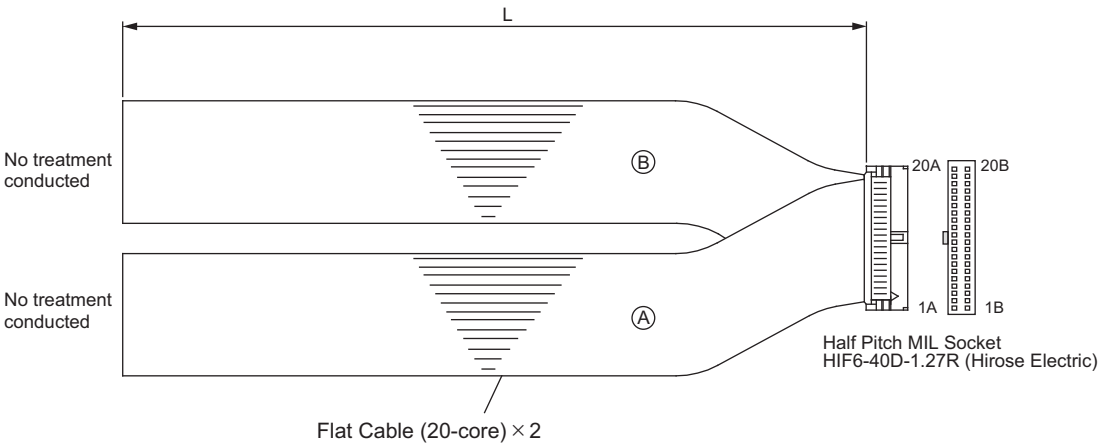

3.3.5 Extension I/O

The device mounted in an extension slot (two slots) can be assigned to the general-purposed input 048 to 299 and general-purposed output 348 to 599.

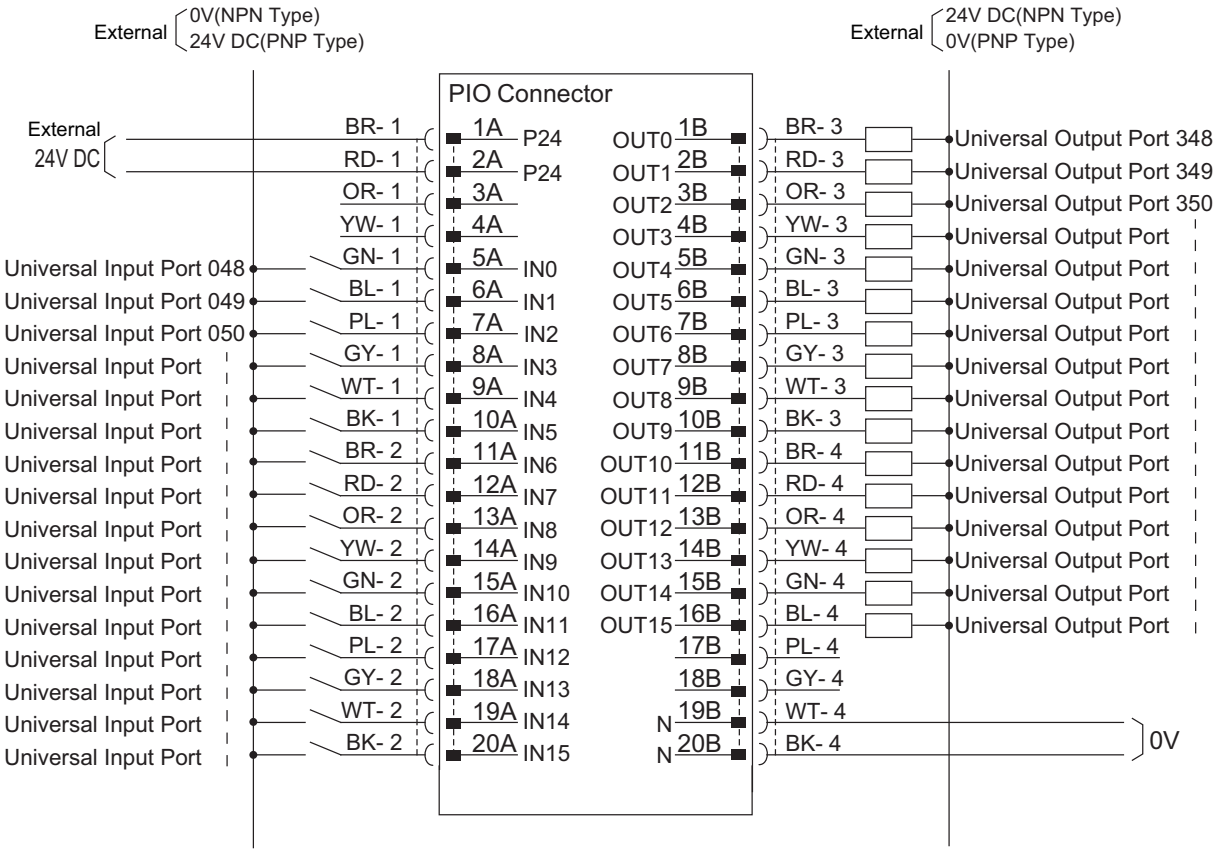

- Use the attached cable for the I/O connection.
  Model : CB-PAC-PIO□□□ (□□□ indicates the cable length L. Example. 020 = 2m)

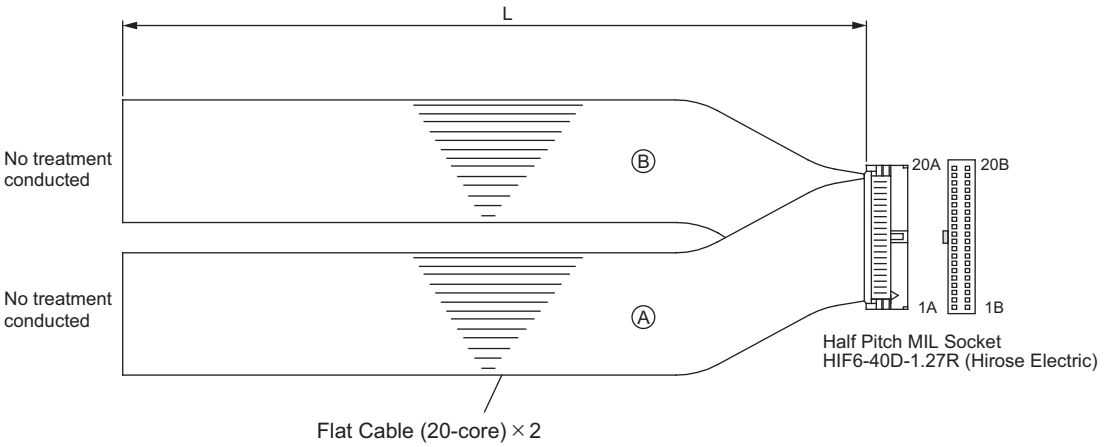

3.4 Wiring Method

3.4.1 Wiring on AC Inlet for Power Supply

Input power voltage range: 100 to 230V AC±10%

There are two types of power supply codes enclosed.
1) For 100V AC · · · · Use the enclosed cable with one end with inlet and the other with outlet.
2) For 200V AC · · · · Cable with one end with inlet and the other with ring-tongue terminals (3 terminals) or inlet side socket only

It is necessary to have an installation work to connect a power supply cable for 200V AC.
Make sure that a person with knowledge of electricity performs the wiring.

3.4.2 Wiring for the Teaching Tool

A teaching tool can be connected with RS232C or USB.
The teaching connector is used to connect an IAI teaching pendant or PC (PC software) so that the equipment can be operated, set up or otherwise manipulated from the teaching pendant/PC.

- List of Teaching Connector Interface Specifications

Specification		Remark
Connecter	RS232C (DSUB-25) USB (Type B)	XM3B-2542-502L (by OMRON) UBBS-4R-D14-4D (by JST)
Baud Rate	115.2 kbps max.	
Maximum Connection Distance	10m (RS232C) 5m (USB)	At 38.4Kbps
Connected Unit	PC or dedicated teaching pendant	PC, teaching pendant
Power Supply (RS232C)	5V DC or 24V DC	Each line is fitted with multiple fuses to protect against short circuit. (These fuses trip at 1.1 to 2.2 A.)
Protocol	Serial communication protocol (Format B)	
Emergency Stop Control (RS232C)	Emergency stop relay drive (24-V drive)	A line for driving the emergency stop relay is provided in the interface connector and connected to other emergency stop contacts in series. Two independent emergency stop input circuits are installed to provide redundancy.
Enable Control (RS232C)	Enable switch line (24-V drive)	An enable switch connection wire is provided for interlock with operator's operations. Two independent enable input circuits are installed to provide redundancy.

[1] RS232C Interface

- Terminal Assignments

Pin No.	Direction	Signal Name	Description
1		FG	Frame ground
2	Out	TXD	Transmit data
3	In	RXD	Receive data
4	Out	RTS	Request to send
5	In	CTS	Clear to send
6	Out	DSR	Equipment ready
7		SG	Signal ground
8		NC	Not connected
9	In	RSVTBX1	Not used
10	In	RSVTBX2	Not used
11		NC	Not connected
12	Out	EMGOUT1	Emergency stop contact 1
13	In	EMGIN1	
14		NC	Not connected
15	Out	RSVVCC	24V teaching pendant power
16	Out	EMGOUT2	Emergency stop contact 2
17	Out	ENBVCC1	Enable drive power 1
18	Out	VCC	Power output (teaching pendant power)
19	In	ENBTBX1	Enable input 1
20	In	DTR	Terminal ready
21	Out	ENBVCC2	Enable drive power 2
22	In	ENBTBX2	Enable input 2
23	Out	EMGS	Emergency stop status
24	In	EMGIN2	Emergency stop contact 2
25		SG	Signal ground

The shaded signals are supported by IA-101-XA-MW teaching pendants TB-02D, TB-01D, SEL-TD only.

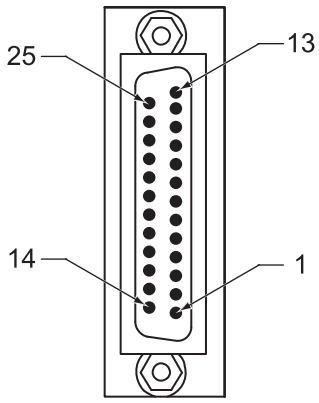

[2] USB Interface

232 communication line and USB communication line for connector for teaching use the same line in common inside, thus communication at the same time cannot be performed.

* Since the circuit is constructed to disable the RS232 line once it detects the connection of USB, USB communication gets prioritized.

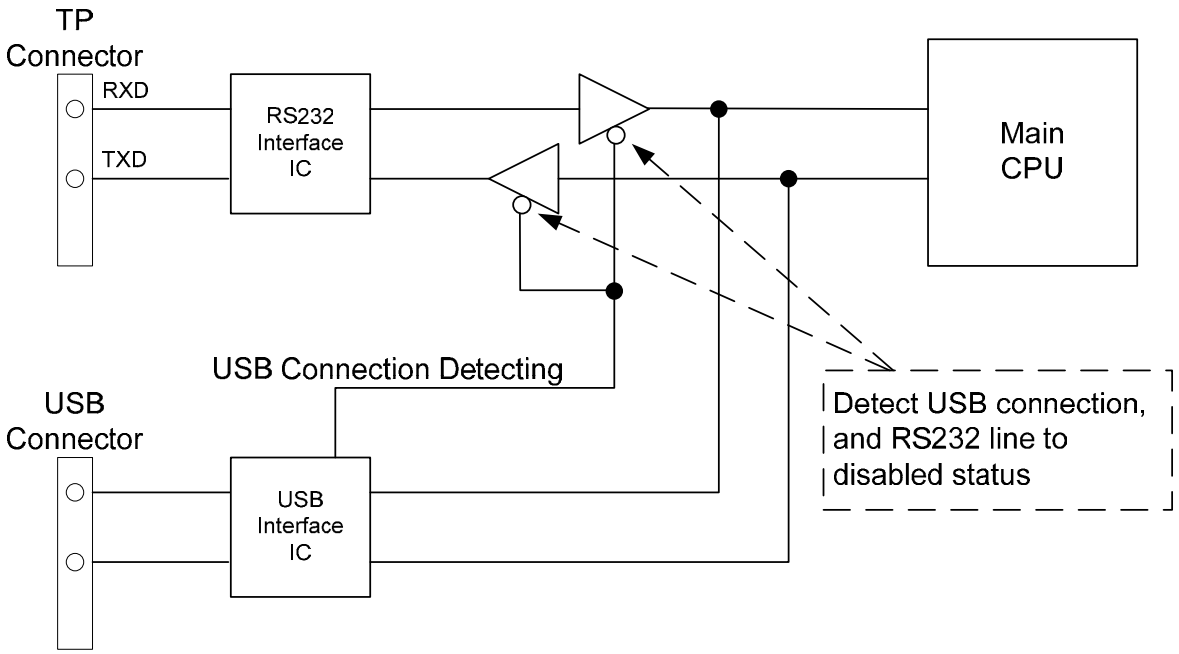

USB/232 Switchover Circuit

⚠ Caution: When Using USB
Since the enable line on the connector for teaching is made active by setting AUTO/MANU Switch to MANU side, the status becomes disabled in the condition that the connector for teaching is disconnected.
When operating the actuator in MANU status, plug in a dummy plug or PC cable in the connector for teaching.
When not duplexing the system I/O connector wiring (for Safety Category 2 or below):
Plug in a dummy plug DP-1 or DP-2.
When duplexing the system I/O connector wiring (for Safety Category 3 or above):
Plug in the dummy plug DP-2.

3.4.3 Wiring of System I/O

・System I/O Connector General Specifications

Item	Model Name	Supplier
Connector on PCB	DMC1,5/6-G1-3,5P20THR	PHOENIX CONTACT
Connector on Mating Component	DFMC1,5/6-ST-3,5 (Symbol name marked)	PHOENIX CONTACT

Pin No.	Signal Name	Specifications
12	EMGIN	Emergency-stop input
11	EMGOUT	24V Output for Emergency Stop
10	EMGS1+	Emergency Stop Contact Output 1
9	EMGS1-	Emergency Stop Contact Output 1
8	EMGS2+	Emergency Stop Contact Output 2
7	EMGS2-	Emergency Stop Contact Output 2
6	ENBIN	Enable input
5	ENBOUT	24V Output for Enable
4	ENBS1+	Enable Contact Output 1
3	ENBS1-	Enable Contact Output 1
2	ENBS2+	Enable Contact Output 2
1	ENBS2-	Enable Contact Output 2

Cable Specifications for Connector on Mating Component	
Item	Specification
Cable Size	AWG16-AWG22
Recommended Peeled Length	10 [mm]

* Contact output specification: 30V DC:0.5A or less
* EMGIN and ENBIN input specification: 24V DC:10mA or less

3.4.4 Wiring for PIO

[1] IO Cable Layout

Model : CB-PAC-PIO□□□ (□□□ indicates the cable length L. Example. 020 = 2m)

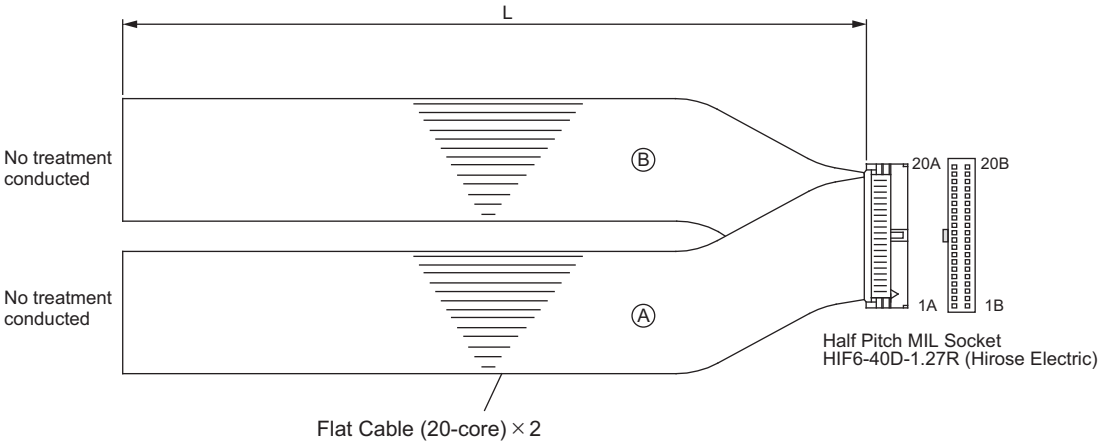

No.	Signal Name	Cable Color	Wiring	No.	Signal Name	Cable Color	Wiring
1A	24V	Brown-1	Flat Cable Ⓐ (Press Welding)	1B	OUT0	Brown-3	Flat Cable Ⓑ (Press Welding) AWG28
2A	24V	Red-1		2B	OUT1	Red-3	
3A	-	Orange-1		3B	OUT2	Orange-3	
4A	-	Yellow-1		4B	OUT3	Yellow-3	
5A	IN0	Green-1		5B	OUT4	Green-3	
6A	IN1	Blue-1		6B	OUT5	Blue-3	
7A	IN2	Purple-1		7B	OUT6	Purple-3	
8A	IN3	Gray-1		8B	OUT7	Gray-3	
9A	IN4	White-1		9B	OUT8	White-3	
10A	IN5	Black-1		10B	OUT9	Black-3	
11A	IN6	Brown-2		11B	OUT10	Brown-4	
12A	IN7	Red-2		12B	OUT11	Red-4	
13A	IN8	Orange-2		13B	OUT12	Orange-4	
14A	IN9	Yellow-2		14B	OUT13	Yellow-4	
15A	IN10	Green-2		15B	OUT14	Green-4	
16A	IN11	Blue-2		16B	OUT15	Blue-4	
17A	IN12	Purple-2		17B	-	Purple-4	
18A	IN13	Gray-2		18B	-	Gray-4	
19A	IN14	White-2		19B	0V	White-4	
20A	IN15	Black-2		20B	0V	Black-4	

[2] IO Replacement Cable Layout

Model: CB-TTA-PIOJ005 (Standard 0.5m)

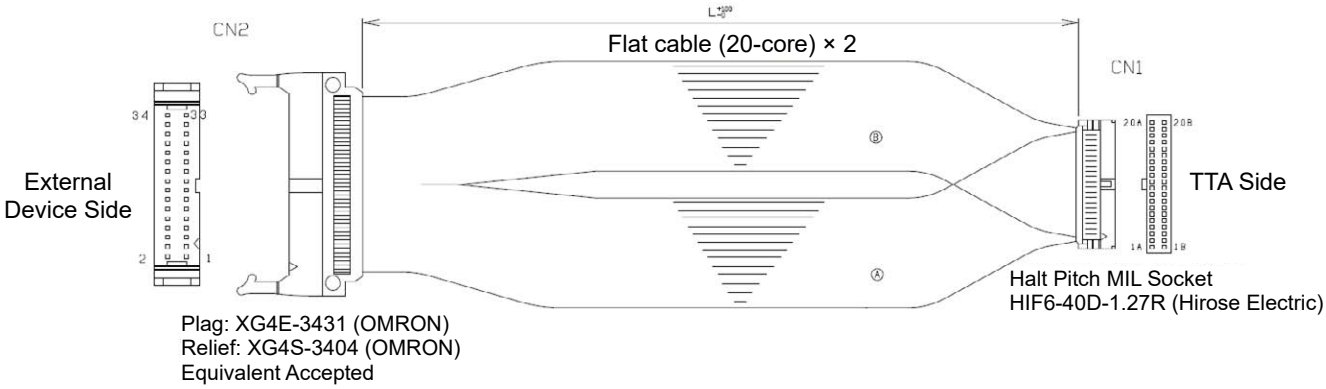

Wiring	Color	Signal Name	No.
Flat Cable (Press Welding)	Brown-1	24V	1A
	Green-1	IN0	1B
	Blue-1	IN1	2A
	Purple-1	IN2	2B
	Gray-1	IN3	3A
	White-1	IN4	3B
	Black-1	IN5	4A
	Brown-2	IN6	4B
	Red-2	IN7	5A
	Orange-2	IN8	5B
	Yellow-2	IN9	6A
	Green-2	IN10	6B
	Blue-2	IN11	7A
	Purple-2	IN12	7B
	Gray-2	IN13	8A
	White-2	IN14	8B
	Black-2	IN15	9A
	Brown-3	OUT0	9B
	Red-3	OUT1	10A
	Orange-3	OUT2	10B
	Yellow-3	OUT3	11A
	Green-3	OUT4	11B
	Blue-3	OUT5	12A
	Purple-3	OUT6	12B
	Gray-3	OUT7	13A
	White-3	OUT8	13B
	Black-3	OUT9	14A
	Brown-4	OUT10	14B
	Red-4	OUT11	15A
	Orange-4	OUT12	15B
	Yellow-4	OUT13	16A
	Green-4	OUT14	16B
	Blue-4	OUT15	17A
	Black-4	0V	17B

No.	Signal Name	Color	Wiring
1A	24V	Brown-1	Flat Cable Ⓐ (Press Welding)
2A	24V	Red-1	
3A	NC	Orange-1	
4A	NC	Yellow-1	
5A	IN0	Green-1	
6A	IN1	Blue-1	
7A	IN2	Purple-1	
8A	IN3	Gray-1	
9A	IN4	White-1	
10A	IN5	Black-1	
11A	IN6	Brown-2	
12A	IN7	Red-2	
13A	IN8	Orange-2	
14A	IN9	Yellow-2	
15A	IN10	Green-2	
16A	IN11	Blue-2	
17A	IN12	Purple-2	
18A	IN13	Gray-2	
19A	IN14	White-2	
20A	IN15	Black-2	
1B	OUT0	Brown-3	Flat Cable Ⓑ (Press Welding)
2B	OUT1	Red-3	
3B	OUT2	Orange-3	
4B	OUT3	Yellow-3	
5B	OUT4	Green-3	
6B	OUT5	Blue-3	
7B	OUT6	Purple-3	
8B	OUT7	Gray-3	
9B	OUT8	White-3	
10B	OUT9	Black-3	
11B	OUT10	Brown-4	
12B	OUT11	Red-4	
13B	OUT12	Orange-4	
14B	OUT13	Yellow-4	
15B	OUT14	Green-4	
16B	OUT15	Blue-4	
17B	NC	Purple-4	
18B	NC	Gray-4	
19B	0V	White-4	
20B	0V	Black-4	

3.4.5 Grounding

To prevent electric shock, make sure to ground a strand with its wire diameter 1.3mm^2 (AWG16 or equiv.) or more for E-terminal on AC inlet and protection grounding terminals around the inlets.

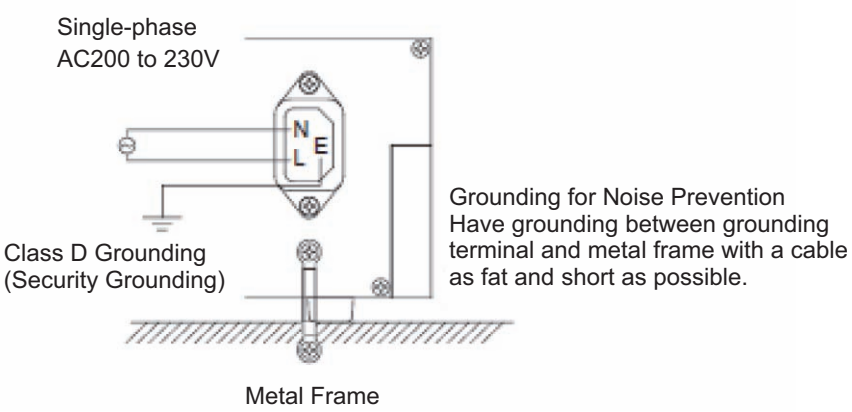

E-terminal on the inlet is a functional grounding.
Make sure to have grounding terminals (protection grounding terminals) around the inlet grounded.

Make it dedicated grounding.

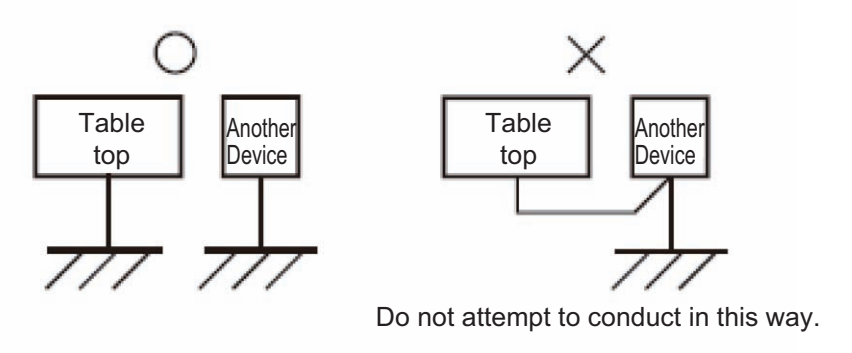

3.4.6 Wiring for SIO Module Communication Cable

[1] SIO Module 485 Communication Cable
(one end with bare cut without connectors with no terminal finishing)
Model : CB-TTA-485□□□ (□□□ indicates the cable length (L) Example: 030=3m)

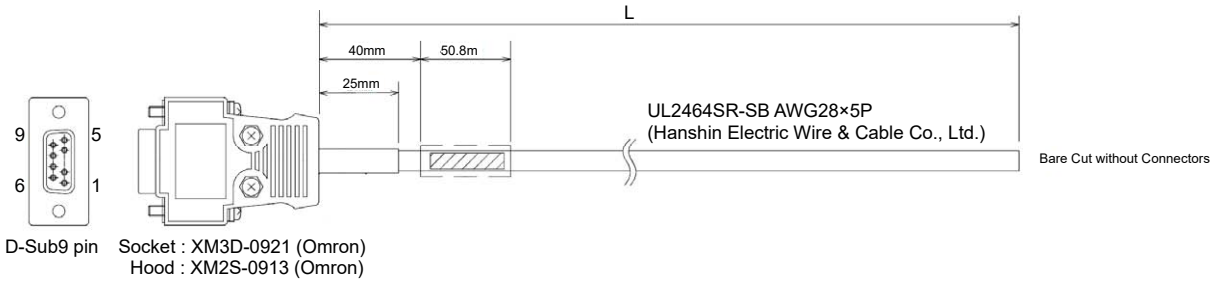

Wiring diagram

Controller Side
XM3D-0921

CH	Color		Dot Mark / Color		Signal	No.
1	AWG28	Orange	▪	Red	SRD1+	1
1		Orange	▪	Black	SRD1-	2
1		White	▪	Red	SRD1+	3
-		-	-	-	(E)	4
1		Pink	▪	Red	SG	5
-		-	-	-	(E2)	6
1		White	▪	Black	SRD1-	7
2		Yellow	▪	Red	SRD2+	8
2		Yellow	▪	Black	SRD2-	9
The Shield is clamped to the hood (FG)						

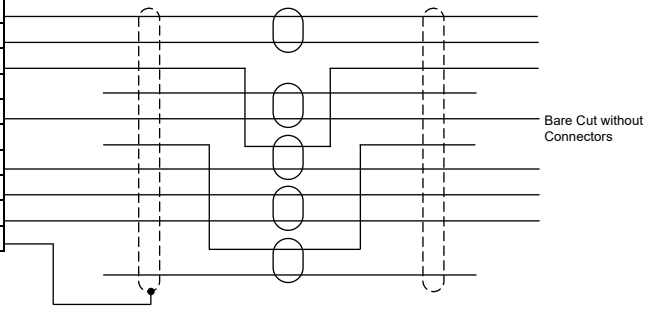

[2] SIO Module 485 Communication Cable
(one end with bare cut without connectors with terminal finishing)
Model : CB-TTA-485□□□-TERM (□□□ indicates the cable length (L) Example: 030=3m)

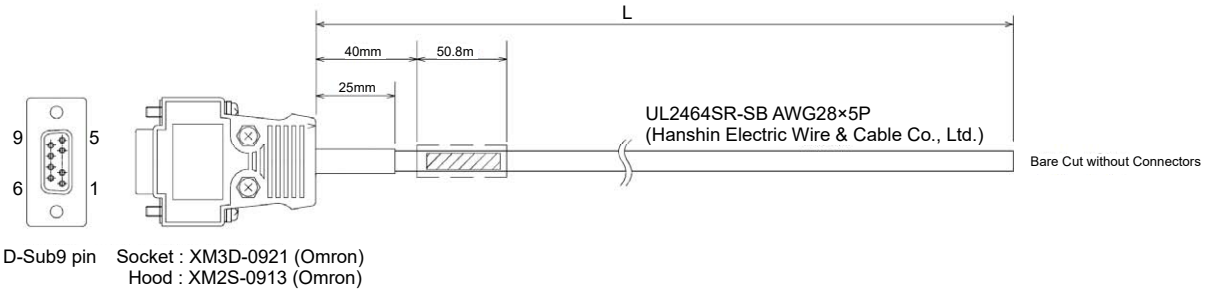

Wiring diagram

Controller Side
XM3D-0921

CH	Color		Dot Mark / Color		Signal	No.
1	AWG28	Orange	▪	Red	SRD1+	1
1		Orange	▪	Black	SRD1-	2
1		White	▪	Red	SRD1+	3
1		Black	-	-	E	4
1		Pink	▪	Red	SG	5
2		Black	-	-	E2	6
1		White	▪	Black	SRD1-	7
2		Yellow	▪	Red	SRD2+	8
2		Yellow	▪	Black	SRD2-	9
The Shield is clamped to the hood (FG)						

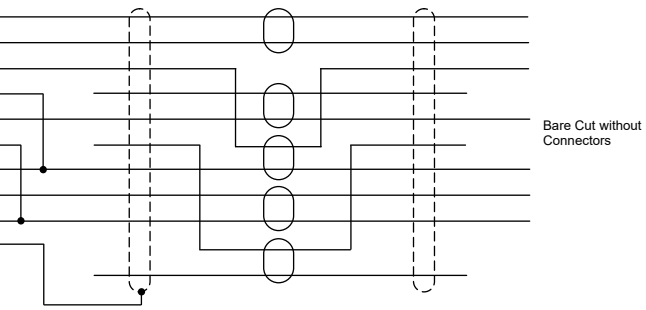

[3] SIO Module 232C Communication Cable
(one end with bare cut without connectors)
Model : CB-TTA-232□□□ (□□□ indicates the cable length (L) Example: 030=3m)

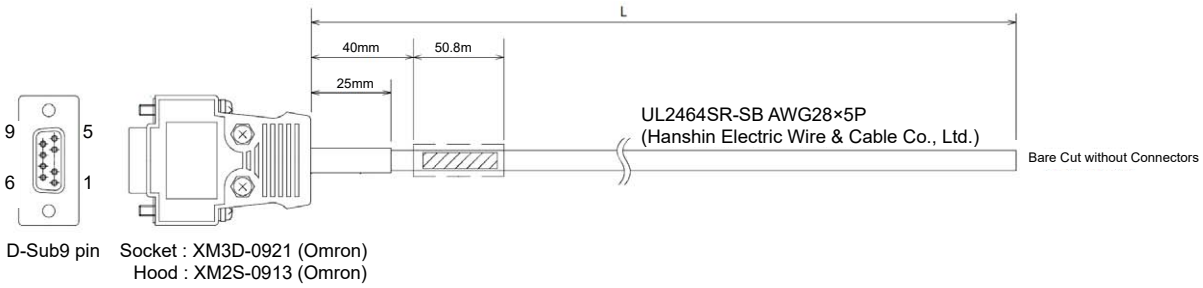

Wiring diagram

Controller Side
XM3D-0921

CH	Color		Dot Mark / Color		Signal	No.
2	AWG28	Orange	▪	Red	RXD2	1
1		Orange	▪	Black	RXD	2
1		White	▪	Red	TXD	3
1		-	-	-	NC	4
1		Pink	▪	Red	SG	5
1		-	-	-	NC	6
1		-	-	-	NC	7
1		-	-	-	NC	8
2		Yellow	▪	Black	TXD2	9
The Shield is clamped to the hood (FG)						

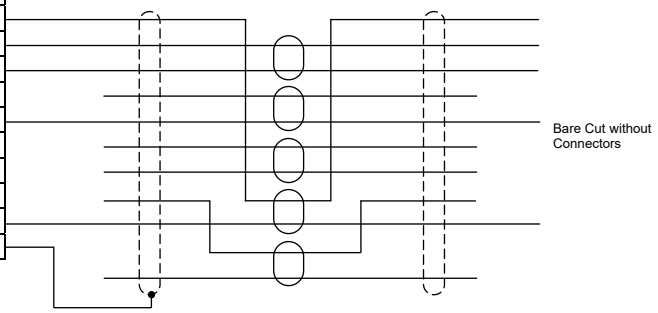

Chapter 4 Operation

4.1 Types of Operations

This product is equipped with a programing controller that enables to make operation available even without the host controller.
Programming for this controller uses IAI's dedicated programming language (SEL language).
[Refer to the separate SEL Language Programming Manual.]

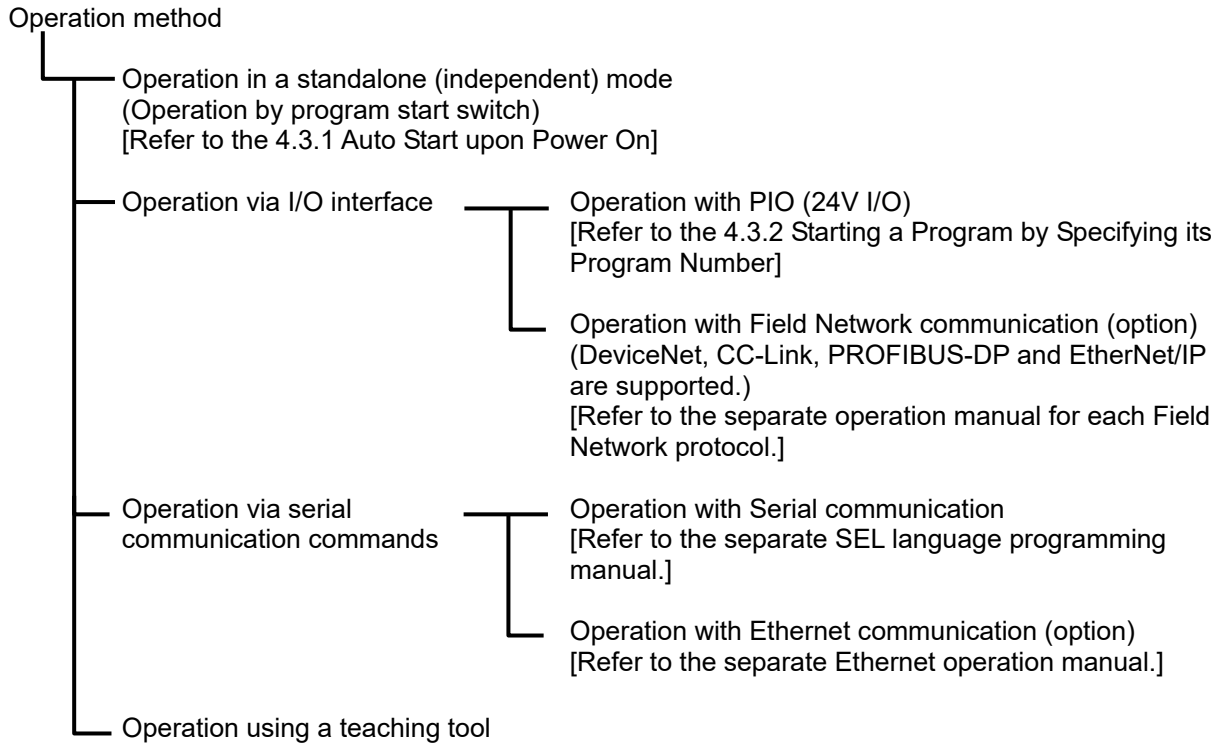

[Teaching tool]
The setting of such information as programs or parameters is to e established on the PC software or teaching pendant.
The table below shows the versions of the teaching tools which are applicable for TTA.

System	Version	Remark
X-SEL PC Software (IA-101-X-MW)	V10.00.00.00 or later	
Teaching Pendant (TB-01)		
Teaching Pendant (TB-02)		
Teaching Pendant (SEL-T/TD)	V1.16 or later	Applicable in hardware revision "2"

* These are the versions planned to be applicable as of Sep 3, 2016. There may be a case the actual applicable version can differ.

4.2 Starting the Controller

4.2.1 Power Supply and Cutoff

[1] Power Supply Sequence

Turn on the power to the peripheral devices before turning on the main power supply.
The status of the DIO power supply and fieldbus connection is diagnosed at the initialization process.
An alarm will be detected when the power is not on or no connection is established. (At the delivery.)

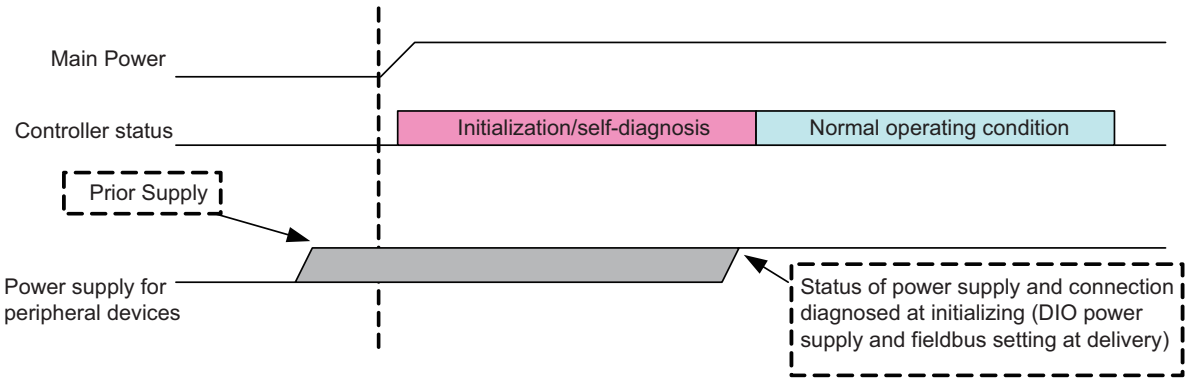

[2] Power Cutoff Sequence

Cut the power off for the peripheral devices at the same time as or after cutting off the main power.

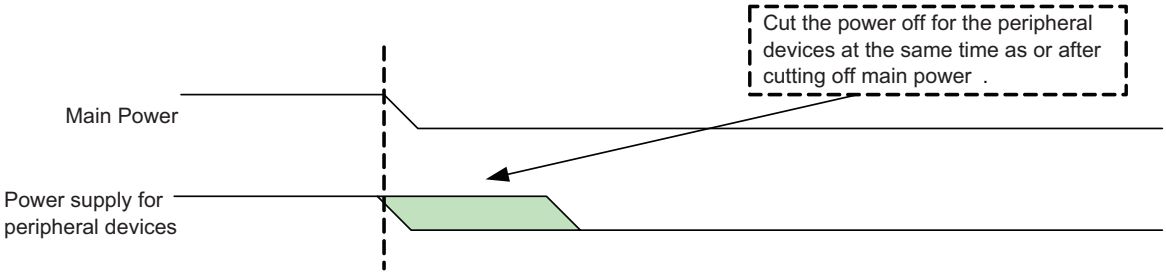

4.2.2 Panel Window Display

The 4-digit, 7-segment LED shows the controller status.

When the unit is started up normally, "r dy" is displayed after the initial processing display.
If an indication "E***" is displayed, check "Error List" in Chapter 6. Refer to table below for other displays.

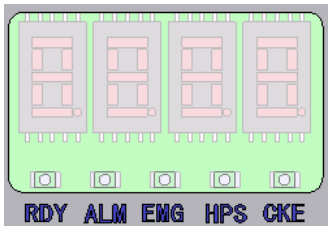

1) 2) 3) 4) 5)

Displayed Contents of LED Lamps on Panel Window

No.	Name	Status when LED is on
1)	RDY	PIO program operation available
2)	ALM	An error of operation cancel level or above occurred.
3)	EMG	Emergency stop
4)	HPS	All axes have completed home-return operation
5)	CKE	Sytem clock error

・Panel window display list (1/2) Application control codes

Display				Priority (Note 1)	Description
	A	C	F	1	AC power is cut off. (including momentary power failure or drop in power-source voltage)
E	F	*	*	1	System-down level error
8	8	8	8	2	Illumination test on all of 7-seg LEDs (Initialization sequence)
I	n	*	*	2	Initialization sequence number
I	n	n	*	2	Display of field network board initializing sequence
	P	r	d	3	Writing data to the flash ROM.
	E	r	G	4 Display switchover	Emergency stop is being actuated (except during the update mode)
	e	n	b	4 Display switchover	Enable switch (deadman switch/safety gate) OFF (except in the update mode)
E	E	*	*	4 Display switchover	Cold-start level error (Most critical level system error)
E	D	*	*		
E	6	*	*		
E	5	*	*		
E	C	*	*	4 Display switchover	Operation-cancellation level error (Most critical level system error)
E	B	*	*		
E	4	*	*		
-		r	P	5	Waiting for drive cutoff analysis input (except during the update mode)
-		r	S	5	Operation is in pause (waiting for restart) (except during the update mode)
-	I	L	C	6	All servo axes are interlocked (except during the update mode)
E	A	*	*	7	Message level error (Most critical level system error)
E	9	*	*		
E	2	*	*		
P	*	*	*	8	A program is running (last started program). (*** indicates the program number)
A	r	d	y	8	Ready status (AUTO mode)
	r	d	y	8	Ready status (MANU mode)

Note 1 The smaller the value to be displayed, the higher the priority.

・Panel window display list (2/2) Application control codes

Display				Priority (Note 1)	Description
E	E	*	*	1	Cold-start level error
E	C	*	*	1	Operation-cancellation level error
E	A	*	*	2	Message level error
r	U	d		2	In updating mode
	J	P	A	2	Jump to the application
C	H	F	C	2	Core flash ROM check process
C	H	F	A	2	Application flash ROM check process
C	H	S	d	2	SDRAM check process

Note 1 The smaller the value to be displayed, the higher the priority.

4.3 Program Operation

For the operation there are two ways of start-up. One is the automatic start-up of the set program No. and the other is to start up with the program No. selected externally.

4.3.1 Auto Start upon Power On

After the power is turned ON, the program with its No. registered in the XSEL controller, can be automatically started up.

1) Connect the PC software and set the I/O parameter No. 33 to “1” and set the program No. to be started up in the parameter No. 1 (for others)

Parameter type and No.	Set Value	Description
I/O parameter No. 33	0	Input port 019 is designated as a general-purpose input.
	1 (factory default)	In the AUTO mode, when the power is turned ON or the software reset is performed, the program No. set in parameter No. 1 (for others) is executed. The input port 019 can be used as a universal input port.
	2	When input port 019 is turned ON, the program whose number is set in other parameter No. 1 is executed. When this port is turned OFF, all currently running programs stop.
Other parameter No. 1	1 to 255	Set the program number of the program you want to start automatically.

2) Set Operation Mode Switch to AUTO side.
3) Turn off the power and then turn it back on.
4) The set program will start after the reboot (after RDY signal turns ON if in normal startup).

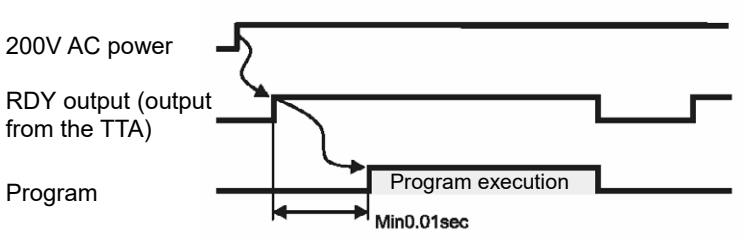

⚠ Caution: After the power is turned on, unexpected movements of the robot may create dangerous situations.
For safety, provide an interlock whereby the program is started only after a start confirmation signal has been input from a pushbutton switch, etc.
An example of operation is given below.

1) Set the parameter No. 33 to “2”. The program starts when input port 019 is turned ON, and stops when the port is turned OFF.
2) Set Operation Mode Switch to AUTO side.
3) Turn off the power and then turn it back on.
4) Turn Input Port 019 ON after confirming 0.01sec has passed since the startup (after RDY signal turns ON if in normal startup).
5) The specified program starts.

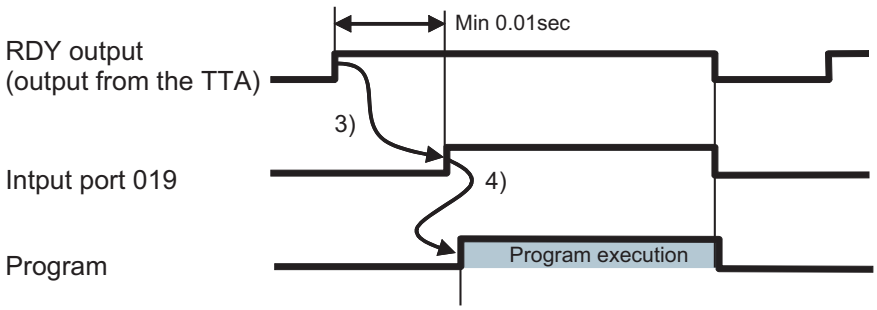

4.3.2 Starting a Program by Specifying its Program Number

The maximum number of programs is 255. However, the programs that can start with Program Switch of front panel are from No. 1 to No. 99. Conduct the startup of No. 100 to No. 255 on the automatic start program startup or by the program startup command “EXPG”.

It is set in the initial parameter at delivery that a program is to start with the program changeover switch on the front panel.
Change the setting as below when it is required to indicate a program number that you would like to start up with an external device and have an operation with an input of a startup signal.

1) Connect the PC software and perform the setting, referring to the set values in the following table.

Parameter type and No.		Set Value	Description	Setting
I/O parameter No. 30		0	Input port 016 is designated as a general-purpose input.	Either of those from 0 to 2
		1 (factory default)	After the program number to be started up, is set in the input port 023 (LSB) to 030 (MSB) with BCD, turning ON the input port 016 starts up the program. Turning ON the input port 016 for 0.1 sec or more.	
		2	After the program number to be started up, is set in the input port 023 (LSB) to 030 (MSB) with BCD, turning ON the input port 016 starts up the program. Turning ON the input port 016 for 0.1 sec or more.	
No. 30 = 1 or 2	I/O parameters No. 37 to 44	0	Input ports 023 to 030 are set as general-purpose inputs.	1 (No.440 is 2)
		1 (No.440 is 2)	Input ports 023 to 016 are set as start program number specification ports.	
I/O parameter No. 283		16	Input Function Select 000 Physical Input Port Number	-1 to 299
I/O parameter No. 290 to 297		23 to 30	Input Function Select 007 to 014 Physical Input Port Number	-1 to 299

2) Input the program number after 0.01sec has passed since the startup (after RDY signal turns ON if in normal startup).
3) Set in the input ports set by I/O parameter No. 30, the program number of the program you want to start.
4) Set the program No. and 0.05 sec. or more later, turn ON the input port 000 “Program Start”.
5) Turn ON input port 016 (program start) and keep it ON for 0.1 sec.
6) The specified program starts.

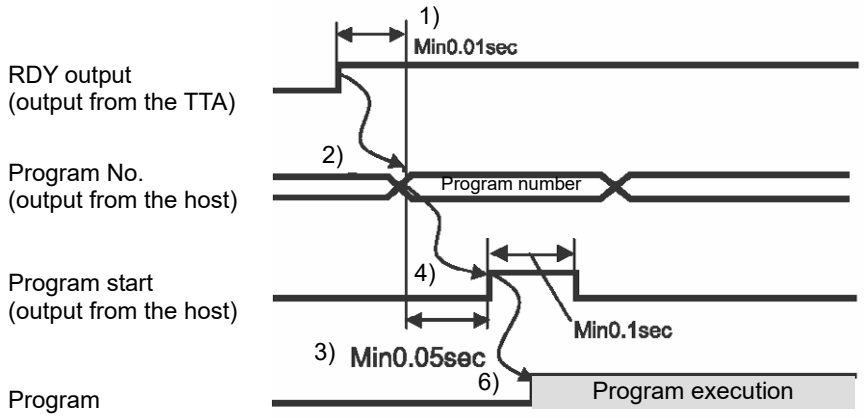

⚠ Caution:
- When Input Function Select 000 (Start) is assigned to another input port, “Start Switch” on the front panel would not work as “Program Start Signal”.
- When Input Function Select 007 to 013 (Digi-Switch) are assigned to other input ports, “Program Switch” on the front panel would not work as “Program Start Indication Program Number”.

4.4 Receiving and Forwarding of I/O Signals Necessary for Operation

I/O port is an area that data is sent and received between this product and external signals via the interface.
One port can exchange data for one contact (1 bit).
Data is exchanged via PIOs (24V I/Os) or over a Field Network.
Either a PIO or Field Network can connect to each port at a time.
Whether to use PIO or Field Network is set by a parameter.

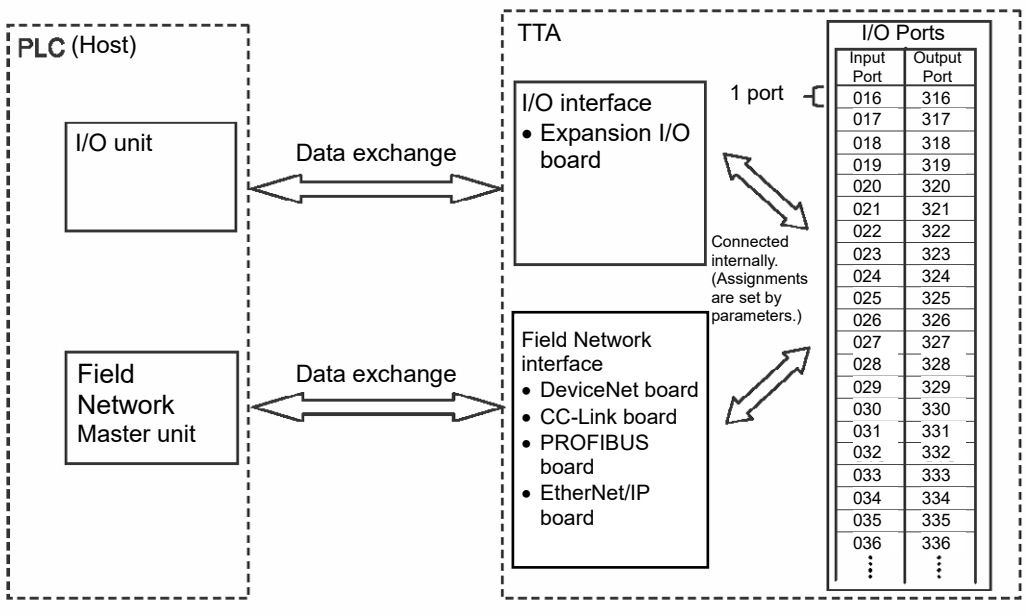

⇔Indicates flow of data.

Refer to Section 3.3.4 for the I/O interface.
For the Field Network Interface, refer to each operation manual.

(1) I/O Map
The factory-set I/O port numbers and functions of the TTA are shown below.
The functions of the I/O port can be changed using the I/O parameter setting.

Type	Port No.	Function	Type	Port No.	Function
Internal Input	000	Program Start	Internal Output	300	ALM (LED on the front panel)
	001	Switch No. 1 (Additional switch), (Software reset)		301	RDY (LED on the front panel)
	002	(Servo ON)		302	EMG (LED on the front panel)
	003	(Startup of auto start program)		303	Automatic operation mode (Start switch LED)
	004	(Software interlock)		304	HPS (LED on the front panel)
	005	Switch No. 2 (Additional switch), (Pause reset)		305	System reservation
	006	Switch No. 3 (Additional switch), (Pause)		306	System reservation
	007	Program number specification Ones place of the digital switch		307	System reservation
	008			308	Internal DI No. 001 ON/OFF
	009			309	Internal DI No. 002 ON/OFF
	010			310	Internal DI No. 003 ON/OFF
	011	Program number specification Tens place of the digital switch		311	Internal DI No. 004 ON/OFF
	012			312	Internal DI No. 005 ON/OFF
	013			313	Internal DI No. 006 ON/OFF
	014			314	System reservation
	015	Switch No. 4 (Additional switch), (Home return, etc.)		315	Internal DI No. 015 ON/OFF
External Input	016 to 031	General-purpose input (Standard I/O Connector (I/O1))	External Output	316 to 331	General-purpose output (Standard I/O Connector (I/O1))
Internal Input	032	System reservation	Internal Output	332	7-segment user display digit specification
	033			333	7-segment user display digit specification
	034			334	System reservation
	035			335	System reservation
	036			336	System reservation
	037			337	7-segment display refresh
	038			338	7-segment user/system alternate display
	039			339	7-segment user display specification
	040			340	DT0 (7-segment user display bit)
	041			341	DT1 (7-segment user display bit)
	042			342	DT2 (7-segment user display bit)
	043			343	DT3 (7-segment user display bit)
	044			344	DT4 (7-segment user display bit)
	045			345	DT5 (7-segment user display bit)
	046			346	DT6 (7-segment user display bit)
	047			347	System reservation
External Input	048 to 299 (*1)	General-purpose input • Field network • Extension DIO (Extension I/O slot 1(I/O2)) (Extension I/O slot 2(I/O3))	External Output	348 to 599 (*1)	General-purpose output • Field network • Extension DIO (Extension I/O slot 1(I/O2)) (Extension I/O slot 2(I/O3))

(Note 1) The input and output port numbers are:

Input 000 to 299 (300 points max.) Output 300 to 599 (300 points max.)

4.5 Position Table and Program Creation and Writing

Create a position table and create a program using the SEL language.
Perform the teaching, etc., and register the required coordinates in the position table. Also, create the program using the SEL language.
[Refer to the separate SEL language programming manual.]
Write the position table and program data in the controller.
[Refer to the separate operation manual for your PC software.]

4.6 How to Use Internal DIO

4.6.1 Internal DI and Dedicated Functions

Internal DI No. 001 to 006, 014 and 015 can be used as the dedicated functional ports (for such as software reset) by the parameter settings. (They are not set to the dedicated functions at delivery.)
To execute the dedicated functions, it is necessary to have the internal DI turned ON/OFF after the parameter settings are established, but it cannot be controlled from the I/O connector. By turning ON/OFF the internal DO corresponding to the internal DI, the dedicated functions can be executed.
Refer to the table below for the correspondence of the port numbers of DO to the port numbers of DI.

DO Port No.	DI Port No.	Special function	Parameter No.
308	001	Software Reset	IO Parameter No.031
309	002	Servo ON	IO Parameter No.032
310	003	Automatic Startup	IO Parameter No.033
311	004	Software Interlock	IO Parameter No.034
312	005	Pause Release	IO Parameter No.035
313	006	Pause	IO Parameter No.036
314	014	Drive Source Release Input	IO Parameter No.044
315	015	Home-return, etc.	IO Parameter No.045

For example, when the SEL program below is executed, the input port number turns ON.

```
BTON   308
TIMW   1
EXIT
```

If DI No. 001 is set to the software reset input, the software reset (reboot) gets executed.
Refer to the parameter list for the details of the dedicated functions.

> ⚠ Caution: In the parameter settings of a normal delivery, DI and DO port numbers are as shown above.
> However, even when a change is made to the input port number that the input function select *** is to be assigned by setting “Input Function Select *** Physical Input Port Number”, as the table above shows, the dedicated functions would not work while the functions that turning ON/OFF of the Output Port No. 308 to 315 is reflected to Input No. 1 to 6 and 14 to 15 are kept.
> For instance, set “Input Function Select 001” = 1, “Input Function Select 001 Physical Input Port No.” = 16, and turn on Output Port No. 308, and then Input Port No. 1 will turn on but the software reset would not be executed.
> Please refer to “4.7 Standard Interface (Version V0.19 or later for the MAIN application part)” for details.

4.6.2 7-Segment Display by User SEL Program

The 7-seg LED in the panel window on the front panel normally displays the information from the system, but it is able to change the display of the 7-seg LED by the SEL program created by the user.

(Display of User and System by Turns)

The user display on the 7-seg uses Internal DO No. 332, 333 and 337 to 346.

Port No.	Function
332	7-segment user display digit specification
333	7-segment user display digit specification
334	System reservation
335	System reservation
336	System reservation
337	7-segment display refresh
338	7-segment user/system alternate display
339	7-segment user display specification
340	DT0 (7-segment user display bit)
341	DT1 (7-segment user display bit)
342	DT2 (7-segment user display bit)
343	DT3 (7-segment user display bit)
344	DT4 (7-segment user display bit)
345	DT5 (7-segment user display bit)
346	DT6 (7-segment user display bit)
347	System reservation

In DO No. 332 and 333, indicate the digit number for the segment to be operated.

ON/OFF of port and indicated digit number 0: OFF 1: ON

No.332	0	1	0	1
No.333	0	0	1	1
Digit to be operated	1	2	3	4

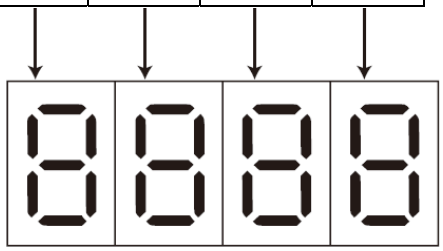

⚠ Caution: In the parameter setting at the delivery, the port numbers are as shown above.

In DO No. 339, establish the setting for the switchover of user display and system display.
Display of user SEL program is conducted when DO No. 339 = 1
Display of normal system is conducted when DO No. 339 = 0

Set DO No. 338 to 1. The display changes between user display and the system display in every one second when DO No. 339 = 1.
All of the digital dots of the seven-segment LED display flash as “8. 8. 8. 8. ” during the user display.

⚠ Caution: When DO No. 338 is set to 0;
User display is shown and no switchover in every one second.
When an error of operation cancel level or higher is occurred, the system display (error display) is shown.
When an error of message level or lower is occurred, no system display (error display), but only the user display is shown. Therefore the user cannot confirm an occurrence of an error, thus do not attempt to use the system with DO No. 338 set to 0.

DO No. 340 to 346 correspond to the 7-seg display bits.

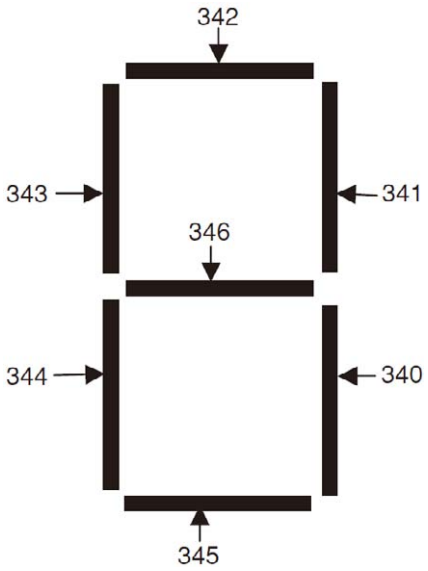

Display is shown no the 7-seg LED by ON-edge (= 0, = 1, = 0) of DO No. 337.
(The 7-seg pattern set in DO No. 340 to 346 is shown on the digit set in DO No. 332 and 333.)

⚠ Caution: In the parameter setting at the delivery, the port numbers are as shown above.

How to Use

1) Establish the display mode setting in DO No. 338 and 339.
2) Set the digit to display (update) in DO No. 332 and 333.
3) Establish the display pattern setting of the 7-seg display in DO No. 340 to 346.
4) Have DO No. 337 (Refresh) turned OFF → ON → OFF. (Update conducted with ON-edge)

To display other digits, repeat the steps 2) to 4).
Even though the display SEL program is finished, the user display continues. To finish the user display, set DO No. 339 OFF.

Reference Program

No.	E	N	Cnd	Cmnd	Operand 1	Operand 2	Pst	Comment
1				LET	99	3		
2				OUT	338	339		User/system alternate display
3				BTOF	337			
4	*	1st digit data set						
5				LET	99	0		
6				OUT	332	333		Indicate 1st digit
7				LET	99	3		3 = Display Data ‘1’
8				OUT	340	346		7-seg Pattern 1
9				BTON	337			Refresh ON
10				BTOF	337			Refresh OFF
11	*	2nd digit data set						
12				LET	99	1		
13				OUT	332	333		Indicate 2nd digit
14				LET	99	118		118 = Display Data ‘2’
15				OUT	340	346		7-seg Pattern 2
16				BTON	337			Refresh ON
17				BTOF	337			Refresh OFF
18	*	3rd digit data set						
19				LET	99	2		
20				OUT	332	333		Indicate 3rd digit
21				LET	99	103		103 = Display Data ‘3’
22				OUT	340	346		7-seg Pattern 3
23				BTON	337			Refresh ON
24				BTOF	337			Refresh OFF
25	*	4th digit data set						
26				LET	99	3		
27				OUT	332	333		Indicate 4th digit
28				LET	99	75		75 = Display Data ‘4’
29				OUT	340	346		7-seg Pattern 4
30				BTON	337			Refresh ON
31				BTOF	337			Refresh OFF
32								
33				EXIT				

⚠ Caution: In the parameter setting at the delivery, the port numbers are as shown above.

4.7 Standard Interface

The input port to assign Input Function Select 000 to 015 set in “Input Function Select ***” can be set (changed) in I/O Parameter “Input Function Select *** Physical Input Port Number”.
The output port to assign Output Function Select 300 to 315 set in “Output Function Select ***” can be set (changed) in I/O Parameter “Output Function Select *** Physical Input Port Number”.
Also, aside from Output Function Select 300 to 315 above, it is available to make an output by setting (assigning to) the output port to Output Function Select 300 (Area 2) to 315 (Area 2) set in “Output Function Select *** (Area 2)” in “Output Function Select *** (Area 2)” in I/O Parameter.

⚠ Caution: The PC Software version that corresponds to the function above is V7.0.2.0 or later.

(1) Example for Assignment of Input Function Select
Shown below is an example of how Input Function Select 000 (Start) set in “Input Function Select 000” can be assigned to another input port.

Set the function of Input Function Select 000 (Start) in I/O Parameter No. 30 “Input Function Select 000”.
Refer to “Chapter 5: Parameter List” for details.
The physical input port number of Input Function Select 000 (Start) is to be set in I/O Parameter No. 283 “Input Function Select 000 Physical Input Port Number”.
For instance, if “016” is set, the function of Input Function Select 000 (Start) is assigned to “Input Port No. 016”.
The signal input port for Input Function Select 000 (Start) becomes Input Port 016.
“Input Port No. 000” after the assignment becomes a general-purpose input port.
However, when “-1 (initial value: set value in normal delivery)” is set in the parameter, the function inactivates, and the function of Input Function Select 000 (Start) is assigned to “Input Port No. 000” shown in the internal DIO list.

⚠ Caution:
- When Input Function Select 000 (Start) is assigned to another input port, “Star Switch” on the front panel would not work as “Program Start Signal”.
- When Input Function Select 007 to 013 (Digi-Switch) are assigned to other input ports, “Program Switch” on the front panel would not work as “Program Start Indication Program Number”.
- When the network is available to use, Input Function Select 000 to 015 can also be assigned to Port No. 048 to 299 assigned to the network.
- Although any output number port can be set individually, Error No. 685 “Input Output Function Select Physical Port Number Error” would occur in case the setting is duplicated or non-continuous port numbers are set in “Program Indication Program Number”.

(2) Example for Assignment of Output Function Select

Shown below is an example of how Output Function Select 300 (ALM) set in “Output Function Select 300” can be assigned to another Output port.

Set the function of Output Function Select 300 in I/O Parameter No. 46 “Output Function Select 000”.
Refer to “Chapter 5: Parameter List” for details.
The physical output port number of Input Function Select 300 (ALM) is to be set in I/O Parameter No. 299 “output Function Select 300 Physical Output Port Number”.
For instance, if “316” is set, the function of Output Function Select 300 (ALM) is assigned to “Output Port No. 316”.
The signal of Output Function Select 300 (ALM) is to be output to Output Port 316.
“Output Port No. 300” after the assignment becomes a general-purpose output port.
However, when “0 (initial value: set value in normal delivery)” is set in the parameter, the function inactivates, and the function of Output Function Select 300 (ALM) is assigned to “Output Port No. 300” shown in the internal DIO list.

When you desire to output the system output to an external device, it is recommended to output separately by using “(3) Output Function Select *** (Area 2)” and “Output Function Select *** (Area 2) Physical Output Port Number” described later.

⚠ Caution:
- If Output Function Select 300 (ALM) is assigned to another output port, the ALM LED in the panel window on the front panel would not work. It would not turn on even in generation of ALM.
- If Output Function Select 301 (RDY) is assigned to another output port, the RDY LED in the panel window on the front panel would not work. It would not turn on even in condition of RDY (PIO program is ready to operate).
- If Output Function Select 302 (EMG) is assigned to another output port, the EMG LED in the panel window on the front panel would not work. It would not turn on even in condition of EMG (emergency stop).
- If Output Function Select 303 (Start Switch) is assigned to another output port, the start switch LED in the panel window on the front panel would not work. It would not turn on even in continuous operation.
- If Output Function Select 304 (HSP) is assigned to another output port, the HSP LED in the panel window on the front panel would not work. It would not turn on even in condition of HSP (home-return complete on all axes).
- Even if the input port number that can assign Input Function Select *** is changed by setting “Input Function Select *** Physical Input Port Number”, the function to reflect the conditions of on/off in Output Port No. 308 to 315 to Input Port No. 1 to 6 and 14 to 15 remains effective as shown in the internal DIO list. For instance, set “Input Function Select 001” = 1, “Input Function Select 001 Physical Input Port No.” = 16, and turn on Output Port No. 308, and then Input Port No. 1 will turn on but the software reset would not be executed.
- Although any output number port can be set individually, Error No. 685 “Input Output Function Select Physical Port Number Error” would occur in case the setting is duplicated.

(3) Example for Assignment of Output Function Select (Area 2)
Shown below is an example for how to output a signal by assigning Output Function Select 300 (Area 2) (ALM) set in “Output Function Select 300 (Area 2)” to the output port set in “Output Function Select 300 (Area 2) Physical Output Port Number”.

Set the function of Output Function Select 300 (Area 2) in I/O Parameter No. 331 “Output Function Select 300 (Area 2)”. Refer to “Chapter 5: Parameter List” for details.
(Area 2) Physical Output Port Number for Output Function Select 300 (Area 2) (ALM) is to be set in I/O Parameter No. 315 “Output Function Select 300 (Area 2) Physical Output Port Number”.
For instance, if “316” is set, the function of Output Function Select 300 (Area 2) (ALM) is assigned to “Output Port No. 316”.
The signal of Output Function Select 300 (ALM) is to be output to Output Port 316.
However, it is ineffective when “0 (Initial value: set value in normal delivery) is set in the parameter.No signal would be output.

It becomes available to output ALM Signal to another port (the output port set in Area 2) with the function of ALM LED on the front panel as it normally is (without any change to the setting of “Output Function Select 300 Physical Input Port Number” of Output Signal Select 300).

⚠ Caution: Although any output number port can be set individually, Error No. 685 “Input Output Function Select Physical Port Number Error” would occur in case the setting is duplicated.

(4) Example of Use

Assuming the external DIO is assigned to Input Port No. 16 to 31 and Output Port No. 316 to 331 (Initial value: set value in normal delivery), shown below is an example for setting to assign the external DIO to the system IO as shown below.

Shown below is an example for setting to display the LED lamps (RDY, ALM, EMG and HPS) on the panel window as they currently do.

Input port No.16	= Program Start Signal (ON Edge) (BCD-specified)
Input port No.17	= Servo ON Signal
Input port No.18 to 23	= Program number specified for program start No.
Input port No.24	= Error Reset (ON Edge)
Input port No.25	= All Effective Axes Homing (ON Edge)
Output port No.316	= Output error of operation-cancellation level or higher (ON)
Output port No.317	= READY output (PIO trigger program can be run)
Output port No.318	= Emergency-stop output (ON)
Output port No.319	= Output during automatic operation
Output port No.320	= Output when all effective linear drive axis home-return operation is complete (coordinate is established)
Output port No.321 to 323	= Output while the 1 to 3 axes servo is on

I/O parameter setting value

No.	Parameters Example	Setting Value	Remarks
30	Input function select 000	1	1 (Default value) = Program Start Signal (ON Edge) (BCD-specified)
32	Input function select 002	1	1 = Servo ON
37 to 42	Input function select 007 to 012	1	1 (Default value) = Program number specified for program start No.
43	Input function select 013	2	2 = Error reset (ON Edge)
45	Input function select 015	1	1 = All effective axes homing (ON Edge)
283	Input function select 000 Physical Input Port Number	16	Input port No. = 16
285	Input function select 002 Physical Input Port Number	17	Input port No. = 17
290 to 295	Input function select 007 Physical Input Port Number	18 to 23	Input port No. = 18 to 23
296	Input function select 013 Physical Input Port Number	24	Input port No. = 24
298	Input function select 015 Physical Input Port Number	25	Input port No. = 25
315 to 330	Output function select 300 (Area 2) Physical Input Port Number to Output function select 307 (Area 2) Physical Input Port Number	316 to 323	Output port No. = 316 to 323
331	Output function select 300 (Area 2)	1	1 = Output error of operation-cancellation level or higher (ON)
332	Output function select 301 (Area 2)	1	1 = READY output (PIO trigger program can be run)
333	Output function select 302 (Area 2)	1	1 = Emergency-stop output (ON)
334	Output function select 303 (Area 2)	2	2 = Output during automatic operation (Other parameter No. 12)
335	Output function select 304 (Area 2)	2	2 = Output when all effective linear drive axis home-return operation is complete (coordinate is established)
336 to 338	Output function select 305 (Area 2) to Output function select 307 (Area 2)	2	2 = Output while the 1 to 3 axes servo is ON (System monitoring task output)

⚠ Caution:
- When Input Function Select 000 (Start) is assigned to another input port, “Star Switch” on the front panel would not work as “Program Start Signal”.
- When Input Function Select 007 to 013 (Digi-Switch) are assigned to other input ports, “Program Switch” on the front panel would not work as “Program Start Indication Program Number”.

4.8 Payload Adjusted for Setting Values

When payload is lower than maximum payload, there may be a case that;
• Operation noise could become loud
• Abnormal noise or vibration could occur
These conditions could be improved by adjusting the servo gain considering the actual payload.

Refer to the servo gain adjustment parameters list described in the next pages.

Select the servo gain parameter in which the actual payload exceeds the value in the column of payload and in the line closest to the actual value.

Select the servo gain based on the total of the payloads below.

[Work Moving Type]
X-Axis : Load weight on the operation table
Y-Axis : Load weight including weight of Z-axis themselves

[Work Fixing Type]
X-Axis : Load weight including weight of Y-axis and Z-axis themselves
Y-Axis : Load weight including weight of Z-axis themselves

⚠ Caution:
- The adjustment parameters described in the list should be taken as a reference. There may be a case that the condition would not improve with the applicable parameter.
- It should be improved by increase or decrease “Torque Filter Time Constant” if “vibration” or “abnormal noise” remains even after adjusting “Velocity Loop Proportional Gain” and “Velocity Loop Integrated Gain”.

4.8.1 Work Moving Type Pulse Motor Specifications

[1] Stroke : 200mm

Load mass	X-Axis (1st Axis)			Y-Axis (2nd Axis)		
	Driver Card Parameters number 42	Driver Card Parameters number 45	Driver Card Parameters number 47	Driver Card Parameters number 42	Driver Card Parameters number 45	Driver Card Parameters number 47
	Torque Filter Time Constant	Velocity Loop Proportional Gain (lower word)	Velocity Loop Integrated Gain (lower word)	Torque Filter Time Constant	Velocity Loop Proportional Gain (lower word)	Velocity Loop Integrated Gain (lower word)
20kg	10	2DC	1D2F	150	2DC	1D2F
15kg	10	23E	16E6	150	23E	16E6
10kg	10	1A0	109C	150	1A0	109C
5kg	10	103	A53	150	103	A53

[2] Stroke : 300mm

Load mass	X-Axis (1st Axis)			Y-Axis (2nd Axis)		
	Driver Card Parameters number 42	Driver Card Parameters number 45	Driver Card Parameters number 47	Driver Card Parameters number 42	Driver Card Parameters number 45	Driver Card Parameters number 47
	Torque Filter Time Constant	Velocity Loop Proportional Gain (lower word)	Velocity Loop Integrated Gain (lower word)	Torque Filter Time Constant	Velocity Loop Proportional Gain (lower word)	Velocity Loop Integrated Gain (lower word)
20kg	150	2DF	1D52	150	2DF	1D52
15kg	150	241	1709	150	241	1709
10kg	150	1A4	10BF	150	1A4	10BF
5kg	150	106	A76	150	106	A76

[3] Stroke : 400mm

Load mass	X-Axis (1st Axis)			Y-Axis (2nd Axis)		
	Driver Card Parameters number 42	Driver Card Parameters number 45	Driver Card Parameters number 47	Driver Card Parameters number 42	Driver Card Parameters number 45	Driver Card Parameters number 47
	Torque Filter Time Constant	Velocity Loop Proportional Gain (lower word)	Velocity Loop Integrated Gain (lower word)	Torque Filter Time Constant	Velocity Loop Proportional Gain (lower word)	Velocity Loop Integrated Gain (lower word)
20kg	150	2E3	1D75	150	2E3	1D75
15kg	150	245	172C	150	245	172C
10kg	150	1A7	10E2	150	1A7	10E2
5kg	150	109	A99	150	109	A99

[4] Stroke : 500mm

Load mass	X-Axis (1st Axis)			Y-Axis (2nd Axis)		
	Driver Card Parameters number 42	Driver Card Parameters number 45	Driver Card Parameters number 47	Driver Card Parameters number 42	Driver Card Parameters number 45	Driver Card Parameters number 47
	Torque Filter Time Constant	Velocity Loop Proportional Gain (lower word)	Velocity Loop Integrated Gain (lower word)	Torque Filter Time Constant	Velocity Loop Proportional Gain (lower word)	Velocity Loop Integrated Gain (lower word)
20kg	150	2E6	E80	150	2E6	16A9
15kg	150	248	B6B	150	248	11D8
10kg	150	1AB	857	150	1AB	D08
5kg	150	10D	542	150	10D	838

4.8.2 Work Fixing Type Pulse Motor Specifications

[1] Stroke : 200mm

Load mass	X-Axis (1st Axis)			Y-Axis (2nd Axis)		
	Driver Card Parameters number 42	Driver Card Parameters number 45	Driver Card Parameters number 47	Driver Card Parameters number 42	Driver Card Parameters number 45	Driver Card Parameters number 47
	Torque Filter Time Constant	Velocity Loop Proportional Gain (lower word)	Velocity Loop Integrated Gain (lower word)	Torque Filter Time Constant	Velocity Loop Proportional Gain (lower word)	Velocity Loop Integrated Gain (lower word)
20kg	10	249	65B	150	2DC	1D2F
15kg	10	1CB	4FC	150	23E	16E6
10kg	10	14D	39E	150	1A0	109C
5kg	10	CF	23F	150	103	A53

[2] Stroke : 300mm

Load mass	X-Axis (1st Axis)			Y-Axis (2nd Axis)		
	Driver Card Parameters number 42	Driver Card Parameters number 45	Driver Card Parameters number 47	Driver Card Parameters number 42	Driver Card Parameters number 45	Driver Card Parameters number 47
	Torque Filter Time Constant	Velocity Loop Proportional Gain (lower word)	Velocity Loop Integrated Gain (lower word)	Torque Filter Time Constant	Velocity Loop Proportional Gain (lower word)	Velocity Loop Integrated Gain (lower word)
20kg	150	24C	662	150	2DF	1D52
15kg	150	1CE	504	150	241	1709
10kg	150	150	3A5	150	1A4	10BF
5kg	150	D1	247	150	106	A76

[3] Stroke : 400mm

Load mass	X-Axis (1st Axis)			Y-Axis (2nd Axis)		
	Driver Card Parameters number 42	Driver Card Parameters number 45	Driver Card Parameters number 47	Driver Card Parameters number 42	Driver Card Parameters number 45	Driver Card Parameters number 47
	Torque Filter Time Constant	Velocity Loop Proportional Gain (lower word)	Velocity Loop Integrated Gain (lower word)	Torque Filter Time Constant	Velocity Loop Proportional Gain (lower word)	Velocity Loop Integrated Gain (lower word)
20kg	150	24F	66A	150	2E3	1D75
15kg	150	1D1	50B	150	245	172C
10kg	150	152	3AD	150	1A7	10E2
5kg	150	D4	24E	150	109	A99

[4] Stroke : 500mm

Load mass	X-Axis (1st Axis)			Y-Axis (2nd Axis)		
	Driver Card Parameters number 42	Driver Card Parameters number 45	Driver Card Parameters number 47	Driver Card Parameters number 42	Driver Card Parameters number 45	Driver Card Parameters number 47
	Torque Filter Time Constant	Velocity Loop Proportional Gain (lower word)	Velocity Loop Integrated Gain (lower word)	Torque Filter Time Constant	Velocity Loop Proportional Gain (lower word)	Velocity Loop Integrated Gain (lower word)
20kg	150	252	672	150	2E6	16A9
15kg	150	1D3	513	150	248	11D8
10kg	150	155	3B5	150	1AB	D08
5kg	150	D7	256	150	10D	838

4.8.3 Work Moving Type Servo Motor Low Lead Specifications

[1] Stroke : 200mm

Load mass	X-Axis (1st Axis)			Y-Axis (2nd Axis)		
	Driver Card Parameters number 42	Driver Card Parameters number 45	Driver Card Parameters number 47	Driver Card Parameters number 42	Driver Card Parameters number 45	Driver Card Parameters number 47
	Torque Filter Time Constant	Velocity Loop Proportional Gain (lower word)	Velocity Loop Integrated Gain (lower word)	Torque Filter Time Constant	Velocity Loop Proportional Gain (lower word)	Velocity Loop Integrated Gain (lower word)
30kg	0	E73	460B	0	E51	4567
25kg	0	CB6	3DA0	0	C95	3CFC
20kg	0	AFA	3535	0	AD8	3491
15kg	0	93D	2CCA	0	91B	2C26
10kg	0	781	245F	0	75F	23BB
5kg	0	5C4	1BF4	0	5A2	1B50

[2] Stroke : 300mm

Load mass	X-Axis (1st Axis)			Y-Axis (2nd Axis)		
	Driver Card Parameters number 42	Driver Card Parameters number 45	Driver Card Parameters number 47	Driver Card Parameters number 42	Driver Card Parameters number 45	Driver Card Parameters number 47
	Torque Filter Time Constant	Velocity Loop Proportional Gain (lower word)	Velocity Loop Integrated Gain (lower word)	Torque Filter Time Constant	Velocity Loop Proportional Gain (lower word)	Velocity Loop Integrated Gain (lower word)
30kg	0	EAE	472A	0	E8C	4686
25kg	0	CF2	3EBF	0	CD0	3E1B
20kg	0	B35	3654	0	B13	35B0
15kg	0	979	2DE9	0	957	2D45
10kg	0	7BC	257F	0	79A	24DB
5kg	0	5FF	1D14	0	5DE	1C70

[3] Stroke : 400mm

Load mass	X-Axis (1st Axis)			Y-Axis (2nd Axis)		
	Driver Card Parameters number 42	Driver Card Parameters number 45	Driver Card Parameters number 47	Driver Card Parameters number 42	Driver Card Parameters number 45	Driver Card Parameters number 47
	Torque Filter Time Constant	Velocity Loop Proportional Gain (lower word)	Velocity Loop Integrated Gain (lower word)	Torque Filter Time Constant	Velocity Loop Proportional Gain (lower word)	Velocity Loop Integrated Gain (lower word)
30kg	0	EEA	4849	0	EC8	47A5
25kg	0	D2D	3FDF	0	D0B	3F3B
20kg	0	B70	3774	0	B4F	36D0
15kg	0	9B4	2F09	0	992	2E65
10kg	0	7F7	269E	0	7D5	25FA
5kg	0	63B	1E33	0	619	1D8F

[4] Stroke : 500mm

Load mass	X-Axis (1st Axis)			Y-Axis (2nd Axis)		
	Driver Card Parameters number 42	Driver Card Parameters number 45	Driver Card Parameters number 47	Driver Card Parameters number 42	Driver Card Parameters number 45	Driver Card Parameters number 47
	Torque Filter Time Constant	Velocity Loop Proportional Gain (lower word)	Velocity Loop Integrated Gain (lower word)	Torque Filter Time Constant	Velocity Loop Proportional Gain (lower word)	Velocity Loop Integrated Gain (lower word)
30kg	0	F25	4969	0	F03	48C5
25kg	0	D68	40FE	0	D46	405A
20kg	0	BAC	3893	0	B8A	37EF
15kg	0	9EF	3028	0	9CD	2F84
10kg	0	833	27BD	0	811	2719
5kg	0	676	1F52	0	654	1EAE

4.8.4 Work Moving Type Servo Motor High Lead specification

[1] Stroke : 200mm

Load mass	X-Axis (1st Axis)			Y-Axis (2nd Axis)		
	Driver Card Parameters number 42	Driver Card Parameters number 45	Driver Card Parameters number 47	Driver Card Parameters number 42	Driver Card Parameters number 45	Driver Card Parameters number 47
	Torque Filter Time Constant	Velocity Loop Proportional Gain (lower word)	Velocity Loop Integrated Gain (lower word)	Torque Filter Time Constant	Velocity Loop Proportional Gain (lower word)	Velocity Loop Integrated Gain (lower word)
15kg	100	126D	4A24	100	13E7	4C2B
10kg	100	D74	3622	100	E6B	372F
5kg	100	87B	2220	100	8F0	2233

[2] Stroke : 300mm

Load mass	X-Axis (1st Axis)			Y-Axis (2nd Axis)		
	Driver Card Parameters number 42	Driver Card Parameters number 45	Driver Card Parameters number 47	Driver Card Parameters number 42	Driver Card Parameters number 45	Driver Card Parameters number 47
	Torque Filter Time Constant	Velocity Loop Proportional Gain (lower word)	Velocity Loop Integrated Gain (lower word)	Torque Filter Time Constant	Velocity Loop Proportional Gain (lower word)	Velocity Loop Integrated Gain (lower word)
15kg	150	1297	4ACF	150	1416	4CDE
10kg	150	D9E	36CD	150	E9A	37E2
5kg	150	8A5	22CB	150	91E	22E6

[3] Stroke : 400mm

Load mass	X-Axis (1st Axis)			Y-Axis (2nd Axis)		
	Driver Card Parameters number 42	Driver Card Parameters number 45	Driver Card Parameters number 47	Driver Card Parameters number 42	Driver Card Parameters number 45	Driver Card Parameters number 47
	Torque Filter Time Constant	Velocity Loop Proportional Gain (lower word)	Velocity Loop Integrated Gain (lower word)	Torque Filter Time Constant	Velocity Loop Proportional Gain (lower word)	Velocity Loop Integrated Gain (lower word)
15kg	200	12C2	4B79	200	1445	4D91
10kg	200	DC9	3778	200	EC9	3895
5kg	200	8D0	2376	200	94D	2399

[4] Stroke : 500mm

Load mass	X-Axis (1st Axis)			Y-Axis (2nd Axis)		
	Driver Card Parameters number 42	Driver Card Parameters number 45	Driver Card Parameters number 47	Driver Card Parameters number 42	Driver Card Parameters number 45	Driver Card Parameters number 47
	Torque Filter Time Constant	Velocity Loop Proportional Gain (lower word)	Velocity Loop Integrated Gain (lower word)	Torque Filter Time Constant	Velocity Loop Proportional Gain (lower word)	Velocity Loop Integrated Gain (lower word)
15kg	200	12EC	4C24	200	1474	4E45
10kg	200	DF3	3822	200	EF8	3948
5kg	200	8FA	2421	200	97C	244C

4.8.5 Work Fixing Type Servo Motor Low Lead Specifications

[1] Stroke : 200mm

Load mass	X-Axis (1st Axis)			Y-Axis (2nd Axis)		
	Driver Card Parameters number 42	Driver Card Parameters number 45	Driver Card Parameters number 47	Driver Card Parameters number 42	Driver Card Parameters number 45	Driver Card Parameters number 47
	Torque Filter Time Constant	Velocity Loop Proportional Gain (lower word)	Velocity Loop Integrated Gain (lower word)	Torque Filter Time Constant	Velocity Loop Proportional Gain (lower word)	Velocity Loop Integrated Gain (lower word)
30kg	0	E73	460B	0	E73	460B
25kg	0	CB6	3DA0	0	CB6	3DA0
20kg	0	AFA	3535	0	AFA	3535
15kg	0	93D	2CCA	0	93D	2CCA
10kg	0	781	245F	0	781	245F
5kg	0	5C4	1BF4	0	5C4	1BF4

[2] Stroke : 300mm

Load mass	X-Axis (1st Axis)			Y-Axis (2nd Axis)		
	Driver Card Parameters number 42	Driver Card Parameters number 45	Driver Card Parameters number 47	Driver Card Parameters number 42	Driver Card Parameters number 45	Driver Card Parameters number 47
	Torque Filter Time Constant	Velocity Loop Proportional Gain (lower word)	Velocity Loop Integrated Gain (lower word)	Torque Filter Time Constant	Velocity Loop Proportional Gain (lower word)	Velocity Loop Integrated Gain (lower word)
30kg	0	EAE	472A	0	EAE	472A
25kg	0	CF2	3EBF	0	CF2	3EBF
20kg	0	B35	3654	0	B35	3654
15kg	0	979	2DE9	0	979	2DE9
10kg	0	7BC	257F	0	7BC	257F
5kg	0	5FF	1D14	0	5FF	1D14

[3] Stroke : 400mm

Load mass	X-Axis (1st Axis)			Y-Axis (2nd Axis)		
	Driver Card Parameters number 42	Driver Card Parameters number 45	Driver Card Parameters number 47	Driver Card Parameters number 42	Driver Card Parameters number 45	Driver Card Parameters number 47
	Torque Filter Time Constant	Velocity Loop Proportional Gain (lower word)	Velocity Loop Integrated Gain (lower word)	Torque Filter Time Constant	Velocity Loop Proportional Gain (lower word)	Velocity Loop Integrated Gain (lower word)
30kg	0	EEA	4849	0	EEA	4849
25kg	0	D2D	3FDF	0	D2D	3FDF
20kg	0	B70	3774	0	B70	3774
15kg	0	9B4	2F09	0	9B4	2F09
10kg	0	7F7	269E	0	7F7	269E
5kg	0	63B	1E33	0	63B	1E33

[4] Stroke : 500mm

Load mass	X-Axis (1st Axis)			Y-Axis (2nd Axis)		
	Driver Card Parameters number 42	Driver Card Parameters number 45	Driver Card Parameters number 47	Driver Card Parameters number 42	Driver Card Parameters number 45	Driver Card Parameters number 47
	Torque Filter Time Constant	Velocity Loop Proportional Gain (lower word)	Velocity Loop Integrated Gain (lower word)	Torque Filter Time Constant	Velocity Loop Proportional Gain (lower word)	Velocity Loop Integrated Gain (lower word)
30kg	0	F25	4969	0	F25	4969
25kg	0	D68	40FE	0	D68	40FE
20kg	0	BAC	3893	0	BAC	3893
15kg	0	9EF	3028	0	9EF	3028
10kg	0	833	27BD	0	833	27BD
5kg	0	676	1F52	0	676	1F52

4.8.6 Work Fixing Type Servo Motor High Lead specification

[1] Stroke : 200mm

Load mass	X-Axis (1st Axis)			Y-Axis (2nd Axis)		
	Driver Card Parameters number 42	Driver Card Parameters number 45	Driver Card Parameters number 47	Driver Card Parameters number 42	Driver Card Parameters number 45	Driver Card Parameters number 47
	Torque Filter Time Constant	Velocity Loop Proportional Gain (lower word)	Velocity Loop Integrated Gain (lower word)	Torque Filter Time Constant	Velocity Loop Proportional Gain (lower word)	Velocity Loop Integrated Gain (lower word)
22kg	100	12FD	33ED	100	12FD	33ED
20kg	100	1191	300A	100	1191	300A
15kg	100	E03	2652	100	E03	2652
10kg	100	A75	1C9A	100	A75	1C9A
5kg	100	6E7	12E1	100	6E7	12E1

[2] Stroke : 300mm

Load mass	X-Axis (1st Axis)			Y-Axis (2nd Axis)		
	Driver Card Parameters number 42	Driver Card Parameters number 45	Driver Card Parameters number 47	Driver Card Parameters number 42	Driver Card Parameters number 45	Driver Card Parameters number 47
	Torque Filter Time Constant	Velocity Loop Proportional Gain (lower word)	Velocity Loop Integrated Gain (lower word)	Torque Filter Time Constant	Velocity Loop Proportional Gain (lower word)	Velocity Loop Integrated Gain (lower word)
22kg	100	1329	3465	100	1329	3465
20kg	100	11BD	3081	100	11BD	3081
15kg	100	E2F	26C9	100	E2F	26C9
10kg	100	AA1	1D11	100	AA1	1D11
5kg	100	713	1359	100	713	1359

[3] Stroke : 400mm

Load mass	X-Axis (1st Axis)			Y-Axis (2nd Axis)		
	Driver Card Parameters number 42	Driver Card Parameters number 45	Driver Card Parameters number 47	Driver Card Parameters number 42	Driver Card Parameters number 45	Driver Card Parameters number 47
	Torque Filter Time Constant	Velocity Loop Proportional Gain (lower word)	Velocity Loop Integrated Gain (lower word)	Torque Filter Time Constant	Velocity Loop Proportional Gain (lower word)	Velocity Loop Integrated Gain (lower word)
22kg	150	1355	34DC	150	1355	34DC
20kg	150	11E9	30F9	150	11E9	30F9
15kg	150	E5B	2741	150	E5B	2741
10kg	150	ACD	1D88	150	ACD	1D88
5kg	150	73F	13D0	150	73F	13D0

[4] Stroke : 500mm

Load mass	X-Axis (1st Axis)			Y-Axis (2nd Axis)		
	Driver Card Parameters number 42	Driver Card Parameters number 45	Driver Card Parameters number 47	Driver Card Parameters number 42	Driver Card Parameters number 45	Driver Card Parameters number 47
	Torque Filter Time Constant	Velocity Loop Proportional Gain (lower word)	Velocity Loop Integrated Gain (lower word)	Torque Filter Time Constant	Velocity Loop Proportional Gain (lower word)	Velocity Loop Integrated Gain (lower word)
22kg	150	1380	3554	150	1380	3554
20kg	150	1214	3170	150	1214	3170
15kg	150	E86	27B8	150	E86	27B8
10kg	150	AF8	1E00	150	AF8	1E00
5kg	150	76A	1448	150	76A	1448

Chapter 5 List of Parameters

If you have any question regarding changing the parameters, please contact IAI's Sales Engineering Section. After changing a parameter, record the new and old parameter settings.

If you have purchased the PC software, we recommend that you back up the parameters immediately after the controller is delivered and when the system incorporating the controller is started. Since a number of customizing settings use parameters, you should back up the parameters regularly as you back up the programs.
To make the new parameters effective, write them to the flash ROM and then execute a software reset or reconnect the power.
The lists below are examples of default values displayed on the PC software. The default parameter settings vary depending on the operating condition and actuators used.

The values in the "Input range" column represent input limitations on the teaching pendant or in PC software. For the actual settings, enter the values defined in the "Remarks" column.
Values other than those defined in the Remarks column are for fufure expantion, even when they are inside the input range.
Therefore, do not enter values other than those defined in the "Remarks" column.

5.1 I/O Parameters

* It is described as “In Common” when the statement of a parameter should be the same for the pulse motor type and AC servo motor type.

No.	Parameter name		Default value (Reference)	Input range	Unit	Remarks
				~		
1	I/O port assignment type	Common	0	0 ~ 20		0: Fixed assignment
2	Input port start number at I/O1 affixed assignment	Common	000	-1 ~ 599		0 + (Multiple of 8) (Invalid if a negative value is set)
3	Output port start number at I/O1 affixed assignment	Common	300	-1 ~ 599		300 + (Multiple of 8) (Invalid if a negative value is set)
4	System reservation	Common	0H	0H ~ FFFFFFFFH		
5	System reservation	Common	0H	0H ~ FFFFFFFFH		
6	System reservation	Common	0H	0H ~ FFFFFFFFH		
7	System reservation	Common	0H	0H ~ FFFFFFFFH		
8	System reservation	Common	0H	0H ~ FFFFFFFFH		
9	System reservation	Common	0H	0H ~ FFFFFFFFH		
10	I/O error monitor	Common	1	0 ~ 5		0: Do not monitor 1: Monitor 2: Monitor (Do not monitor errors relating to 24-V I/O power source) 3: Monitor (Monitor only errors relating to 24-V I/O power source) * Some exceptions apply. * If 0 (= Do not monitor) or 2 (= Monitor (Monitor only errors relating to 24-V I/O power sours)) is selected, a system error wlii not generate even when an abnomallity relating to the 24-V I/O power source occurs. However, allsubsequent actual outputs from the digital I/O board will be cut off by a circuit to protect the controller.
11	System reservation	Common	0H	0H ~ FFFFFFFFH		
12	System reservation	Common	0H	0H ~ FFFFFFFFH		
13	System reservation	Common	0H	0H ~ FFFFFFFFH		
14	Number of I/O2 fieldbus remote input used ports	Common	0	0 ~ 240		Multiple of 8
15	Number of I/O2 fieldbus remote output used ports	Common	0	0 ~ 240		Multiple of 8
16	Input port start number at I/O2 affixed assignment	Common	-1	-1 ~ 299		0 + (Multiple of 8) (Invalid if a negative value is set)
17	Output port start number at I/O2 affixed assignment	Common	-1	-1 ~ 599		300 + (Multiple of 8) (Invalid if a negative value is set)
18	I/O2 error monitor	Common	1	0 ~ 5		0: Do not monitor 1: Monitor * Some exceptions apply.
19	(For extension)	Common	0			
20	Input filtering periods	Common	2	1 ~ 9	msec	Input signal is recognized when the status is held for twice the period set by this parameter.
21	Register input filtering periods	Common	2	1 ~ 9	msec	Input signal is recognized when the status is held for twice the period set by this parameter.
22	System reservation	Common	2000	0 ~ 99999	msec	
23	System reservation	Common	0H	0H ~ FFFFFFFFH		
24	System reservation	Common	0	0H ~ FFFFFFFFH		
25	(For extension)	Common	0			
26	I/O setting bit pattern 3	Common	0	0H ~ FFFFFFFFH		Bits 0-3: Unmounted output port features to be selected (0: Not to be operated, 1: Internal on/off operation * The same actions as a normal output port should be taken except for when external output is made physically.) (It is applicable for main application part V1.17 and later of the pulse motor type and from the first lot of the AC servomotor type)
27	(For extension)	Common	0			
28	(For extension)	Common	0			

I/O Parameters

No.	Parameter name		Default value (Reference)	Input range	Unit	Remarks
29	(For extension)	Common	0			
30	Input function selection 000	Common	1	0 ~ 5		0: General-purpose input 1: Program start signal (ON edge) (007 to 014, BCD-specified program number) 2: Program start signal (ON edge) (007 to 014, Binary-specified program number) * It is necessary to set =1 (007 to 014, BCD-specified program number) when using the start switch (function switch). * When using this signal to start a program, make sure the signal remains ON to 100 msec or longer so that the program will start without fail. Note: The port number assigned to this function can be changed using I/O Parameter No. 283, “Physical input port number for input function selection 000”.
31	Input function selection 001	Common	0	0 ~ 5		0: General-purpose input 1: Software reset signal (1 second ON) * If continued operation is specified as the action upon emergency stop, enable the software reset signal (to provide a means of canceling the operation). * The condition of output port No. 308 (Internal DIO) is input to input port No. 001 (Internal DIO). Note: The port number assigned to this function can be changed using I/O Parameter No. 284, “Physical input port number for input function selection 001.”
32	Input function selection 002	Common	0	0 ~ 5		0: General-purpose input 1: Servo ON * ON edge: Equivalent to the all-valid-axis servo ON command, OFF edge: Equivalent to the all-valid-axis servo OFF command (A minimum interval of 1.5 seconds is required) (Must be executed in non-operating condition) * The condition of output port No. 309 (Internal DIO) is input to input port No. 002 (Internal DIO). Note: The port number assigned to this function can be changed using I/O Parameter No. 285, “Physical input port number for input function selection 002.”
33	Input function selection 003	Common	1	0 ~ 5		0: General-purpose input 1: General-purpose input (Start the auto-start program upon power-ON reset/software reset in the AUTO mode) 2: Auto-start program start signal (ON edge: Start, OFF edge: Abort all operations/programs (excluding the I/O processing program at operation/program abort)) * If this parameter is used as an auto-start program start signal, turn ON the signal for at least 100 msec so that the program will start without fail. * The condition of output port No. 310 (Internal DIO) is input to input port No. 003 (Internal DIO). Note: The port number assigned to this function can be changed using I/O Parameter No. 286, “Physical input port number for input function selection 003.”
34	Input function selection 004	Common	0	0 ~ 5		0: General-purpose input 1: All servo axis soft interlock (OFF level) (Valid for all commands other than the servo OFF command) (Operation is held upon interlock actuation during automatic operation; operation is terminated upon interlock in non-AUTO mode) * The condition of output port No. 311 (Internal DIO) is input to input port No. 004 (Internal DIO). Note: The port number assigned to this function can be changed using I/O Parameter No. 287, “Physical input port number for input function selection 004.”
35	Input function selection 005	Common	0	0 ~ 5		0: General-purpose input 1: Operation-pause reset signal (ON edge) * The condition of output port No. 312 (Internal DIO) is input to input port No. 005 (Internal DIO). Note: The port number assigned to this function can be changed using I/O Parameter No. 288, “Physical input port number for input function selection 005.”
36	Input function selection 006	Common	0	0 ~ 5		0: General-purpose input 1: Operation-pause reset signal (OFF level) (Valid only during automatic operation) * Cancel pause when an operation-pause reset signal is received. * The condition of output port No. 313 (Internal DIO) is input to input port No. 006 (Internal DIO). Note: The port number assigned to this function can be changed using I/O Parameter No. 289, “Physical input port number for input function selection 006.”

I/O Parameters

No.	Parameter name		Default value (Reference)	Input range	Unit	Remarks
37	Input function selection 007	Common	1	0 ~ 5		0: General-purpose input 1: Program number specified for program start (least significant bit) Note: The port number assigned to this function can be changed using I/O Parameter No. 290, “Physical input port number for input function selection 007.”
38	Input function selection 008	Common	1	0 ~ 5		0: General-purpose input 1: Program number specified for program start Note: The port number assigned to this function can be changed using I/O Parameter No. 291, “Physical input port number for input function selection 008.”
39	Input function selection 009	Common	1	0 ~ 5		0: General-purpose input 1: Program number specified for program start Note: The port number assigned to this function can be changed using I/O Parameter No. 292, “Physical input port number for input function selection 009.”
40	Input function selection 010	Common	1	0 ~ 5		0: General-purpose input 1: Program number specified for program start Note: The port number assigned to this function can be changed using I/O Parameter No. 293, “Physical input port number for input function selection 010.”
41	Input function selection 011	Common	1	0 ~ 5		0: General-purpose input 1: Program number specified for program start Note: The port number assigned to this function can be changed using I/O Parameter No. 294, “Physical input port number for input function selection 011.”
42	Input function selection 012	Common	1	0 ~ 5		0: General-purpose input 1: Program number specified for program start Note: The port number assigned to this function can be changed using I/O Parameter No. 295, “Physical input port number for input function selection 012.”
43	Input function selection 013	Common	1	0 ~ 5		0: General-purpose input 1: Program number specified for program start 2: Error reset (ON edge) Note: The port number assigned to this function can be changed using I/O Parameter No. 296, “Physical input port number for input function selection 013.”
44	Input function selection 014	Common	2	0 ~ 5		0: General-purpose input 2: Program number specified for program start Note: The port number assigned to this function can be changed using I/O Parameter No. 297, “Physical input port number for input function selection 014.”
45	Input function selection 015	Common	0	0 ~ 5		0: General-purpose input 1: Home return of all valid axes (ON edge) 2: Home return of all valid incremental axes (ON edge) * It is necessary to turn the servo ON before home-return operation (I/O Parameter No. 32, Axis-Specific Parameter No. 13) * The condition of output port No. 315 (Internal DIO) is input to input port No. 015 (Internal DIO). Note: The port number assigned to this function can be changed using I/O Parameter No. 298, “Physical input port number for input function selection 015.”
46	Output function selection 300	Common	1	0 ~ 20		0: General-purpose output 1: Output error of operation-cancellation level or higher (ON) 2: Output error of operation-cancellation level or higher (OFF) 3: Output error of operation-cancellation level or higher + emergency stop (ON) 4: Output error of operation-cancellation level or higher + emergency stop (OFF) 7: Output error of maintenance information alert related message level (Error No. 231 to 232) (ON) 8: Output error of maintenance information alert related message level (Error No. 231 to 232) (OFF) Note: The port number assigned to this function can be changed using I/O Parameter No. 299, “Physical input port number for input function selection 300.”
47	Output function selection 301	Common	1	0 ~ 20		0: General-purpose output 1: READY output (PIO trigger program can be run) 2: READY output (PIO trigger program can be run and error of operation-cancellation level or higher is not present) 3: READY output (PIO trigger program can be run and error of cold-start level or higher is not present) Note: The port number assigned to this function can be changed using I/O Parameter No. 300, “Physical input port number for input function selection 301.”

I/O Parameters

No.	Parameter name		Default value (Reference)	Input range	Unit	Remarks
48	Output function selection 302	Common	1	0 ~ 20		0: General-purpose output 1: Emergency-stop output (ON) 2: Emergency-stop output (OFF) Note: The port number assigned to this function can be changed using I/O Parameter No. 301, “Physical input port number for input function selection 302.”
49	Output function selection 303	Common	2	0 ~ 5		0: General-purpose output 1: AUTO mode output 2: Output during automatic operation (Other parameter No. 12) Note: The port number assigned to this function can be changed using I/O Parameter No. 302, “Physical input port number for input function selection 303.”
50	Output function selection 304	Pulse Motor Type	2	0 ~ 5		0: General-purpose output 1: Output if all valid axes are at home (= 0) 2: Output if all valid axes completed home return (coordinates confirmed) 3: Output if all valid axes are at preset home coordinates Note: The port number assigned to this function can be changed using I/O Parameter No. 303, “Physical input port number for input function selection 304.”
		AC Servo Motor Type	2	0 ~ 5		0: General-purpose output 1: Output if all valid axes are at home (= 0) 2: Output if all valid axes completed home return (coordinates confirmed) 3: Output if all valid axes are at preset home coordinates * Use MOVP Command, not HOME Command, when moving the absolute encoder axes to coordinate 0 or home preset coordinate. Note: The port number assigned to this function can be changed using I/O Parameter No. 303, “Physical input port number for input function selection 304.”
51	Output function selection 305	Common	0	0 ~ 5		0: General-purpose output 1: Axis 1 in-position output (OFF if the work part is missed during push-motion operation) 2: Output when axis-1 servo is ON (systemmonitored task output) 3: System reservation Note: The port number assigned to this function can be changed using I/O Parameter No. 304, “Physical input port number for input function selection 305.”
52	Output function selection 306	Common	0	0 ~ 5		0: General-purpose output 1: Axis 2 in-position output (OFF if the work part is missed during push-motion operation) 2: Output when axis-2 servo is ON (Systemmonitored task output) 3: System reservation Note: The port number assigned to this function can be changed using I/O Parameter No. 305, “Physical input port number for input function selection 306.”
53	Output function selection 307	Common	0	0 ~ 5		0: General-purpose output 1: Axis 3 in-position output (OFF if the work part is missed during push-motion operation) 2: Output when axis-3 servo is ON (systemmonitored task output) 3: System reservation Note: The port number assigned to this function can be changed using I/O Parameter No. 306, “Physical input port number for input function selection 307.”
54	Output function selection 308	Common	0	0 ~ 5		0: General-purpose output 1: Axis 4 in-position output (OFF if the work part is missed during push-motion operation) 2: Output when axis-4 servo is ON (systemmonitored task output) 3: System reservation * The condition of output port No. 308 (Internal DIO) is input to input port No. 001 (Internal DIO). (Port number is set in the parameter at delivery) Note: The port number assigned to this function can be changed using I/O Parameter No. 307, “Physical input port number for input function selection 308.”
55	Output function selection 309	Common	0	0 ~ 5		0: General-purpose output * The condition of output port No. 309 (Internal DIO) is input to input port No. 002 (Internal DIO). (Port number is set in the parameter at delivery) Note: The port number assigned to this function can be changed using I/O Parameter No. 308, “Physical input port number for input function selection 309.”

I/O Parameters

No.	Parameter name		Default value (Reference)	Input range	Unit	Remarks
56	Output function selection 310	Common	0	0 ~ 5		0: General-purpose output * The condition of output port No. 310 (Internal DIO) is input to input port No. 003 (Internal DIO). (Port number is set in the parameter at delivery) Note: The port number assigned to this function can be changed using I/O Parameter No. 309, “Physical input port number for input function selection 310.”
57	Output function selection 311	Common	0	0 ~ 5		0: General-purpose output * The condition of output port No. 311 (Internal DIO) is input to input port No. 004 (Internal DIO). (Port number is set in the parameter at delivery) Note: The port number assigned to this function can be changed using I/O Parameter No. 310, “Physical input port number for input function selection 311.”
58	Output function selection 312	Common	0	0 ~ 5		0: General-purpose output * The condition of output port No. 312 (Internal DIO) is input to input port No. 005 (Internal DIO). (Port number is set in the parameter at delivery) Note: The port number assigned to this function can be changed using I/O Parameter No. 311, “Physical input port number for input function selection 312.”
59	Output function selection 313	Common	0	0 ~ 5		0: General-purpose output * The condition of output port No. 313 (Internal DIO) is input to input port No. 006 (Internal DIO). (Port number is set in the parameter at delivery) Note: The port number assigned to this function can be changed using I/O Parameter No. 312, “Physical input port number for input function selection 313.”
60	Output function selection 314	Pulse Motor Type	0	0 ~ 5		0: General-purpose output * The condition of output port No. 314 (Internal DIO) is input to input port No. 014 (Internal DIO). (Port number is set in the parameter at delivery) Note: The port number assigned to this function can be changed using I/O Parameter No. 313, “Physical input port number for input function selection 314.”
		AC Servo Motor Type	0	0 ~ 5		0: General-purpose output 1: At absolute data backup battery voltage drop warning level or below (OR check on all axes. Latched to power-on reset/software reset after error level detected.) * The condition of output port No. 314 (Internal DIO) is input to input port No. 014 (Internal DIO). (Port number is set in the parameter at delivery) Note: The port number assigned to this function can be changed using I/O Parameter No. 313, “Physical input port number for input function selection 314.”
61	Output function selection 315	Common	0	0 ~ 5		0: General-purpose output * The condition of output port No. 315 (Internal DIO) is input to input port No. 015 (Internal DIO). (Port number is set in the parameter at delivery) Note: The port number assigned to this function can be changed using I/O Parameter No. 314, “Physical input port number for input function selection 315.”
62	Physical input port number for axis-1 brake forced release	Common	0	0 ~ 299		Forcibly unlock the brake when the applicable port is ON (Be aware of a falling load). * Invalid if “0” is set (Invalid if input port No. 0 is specified)
63	Physical input port number for axis-2 brake forced release	Common	0	0 ~ 299		Forcibly unlock the brake when the applicable port is ON (Be aware of a falling load). * Invalid if “0” is set (Invalid if input port No. 0 is specified)
64	Physical input port number for axis-3 brake forced release	Common	0	0 ~ 299		Forcibly unlock the brake when the applicable port is ON (Be aware of a falling load). * Invalid if “0” is set (Invalid if input port No. 0 is specified)
65	Physical input port number for axis-4 brake forced release	Common	0	0 ~ 299		Forcibly unlock the brake when the applicable port is ON (Be aware of a falling load). * Invalid if “0” is set (Invalid if input port No. 0 is specified)
66	(For extension)	Common	0			
67	(For extension)	Common	0			
68	(For extension)	Common	0			
69	(For extension)	Common	0			

I/O Parameters

No.	Parameter name		Default value (Reference)	Input range	Unit	Remarks
70	Unaffected general purpose output area number (Min.) when all operations/programs are aborted	Common	300	0 ~ 599		* Important: Outputs in this area must be operated under the responsibility of user programs including the “I/O processing program at operation/program abort.” Outputs outside this area will be forcibly turned OFF. (Invalid if “0” is set)
71	Unaffected general purpose output area number (maximum) when all operations/programs are aborted	Common	315	0 ~ 599		
72	Unaffected general purpose output area number (MIN.) when all operations are paused (servo-axis soft interlock + output-port soft interlock)	Common	300	0 ~ 599		* Important: Outputs in this area must be operated (including recovery) under the responsibility of user programs including the “I/O processing program at all operations pause.” Outputs outside this area will be forcibly turned OFF, reflecting/holding the results of operations performed while all operation pause is effective (only during automatic operation). (Invalid if “0” is set)
73	Unaffected general purpose output area number (maximum) when all operations are paused (servo-axis soft interlock + output-port soft interlock)	Common	599	0 ~ 599		
74	Number of TP user output ports used (hand, etc.)	Common	0	0~ 8		Referenced by TP. (Invalid if “0” is set)
75	TP user output port start number (hand, etc.)	Common	0	0 ~ 599		Referenced by TP.
76	AUTO-mode physical output port number	Common	0	0 ~ 599		(Invalid if “0” is set)
77	Input port number for acceptance permission of PC/TP servo movement command	Common	0	0 ~ 299		* Important: Invalid once operation is started. (Invalid if “0” is set)
78	Input target axis pattern for acceptance permission of PC/TP servo movement command	Common	0	0B ~ 11111111B		
79	Remote mode control input port number	Pulse Motor Type	0	0 ~ 299		System Mode = MANU when indicated DI = On or AUTO/MANU-SW = MANU (Invalid when 0) * Necessary to combine with functional applicable hardware * Debug filter ineffective to remote mode control input port (Main application part V2.00 or later)
		AC Servo Motor Type	0	-		System Mode = MANU when indicated DI = On or AUTO/MANU-SW = MANU (Invalid when 0) * Debug filter ineffective to remote mode control input port (Available only on PC board equipped with main application part V2.12 or later and FPGA Rev7 or later)
80	(PC/TP SIO usage)	Common	1	1 ~ 1		Switching of DIP switches
81	(PC/TP SIO station code)	Common	153	153 ~ 153		Fixed to 153 (99H).
82	(PC/TP SIO reservation)	Common	0			
83	(PC/TP SIO reservation)	Common	0			
84	(PC/TP SIO reservation)	Common	0			
85	(PC/TP SIO reservation)	Common	0			
86	(PC/TP SIO reservation)	Common	0			
87	(PC/TP SIO reservation)	Common	0			
88	(PC/TP SIO reservation)	Common	0			
89	(PC/TP SIO reservation)	Common	0			
90	Usage of SIO channel 1 opened to user (AUTO mode)	Common	0	0 ~ 9		0: Open SEL program 1: Open SEL program (Connect PC/TP when both devices are CLOSED = Used exclusively by the manufacturer) 2: IAI protocol B (Slave)
91	Station code of SIO channel 1 opened to user	Common	153	0 ~ 255		Valid only with IAI protocol. * To be used in common also for Ethernet and Extension SIO.
92	Baud rate type of SIO channel 1 opened to user	Common	0	0 ~ 5		0: 9.6, 1: 19.2, 2: 38.4, 3: 57.6, 4: 76.8, 5: 115.2kbps
93	Data length of SIO channel 1 opened to user	Common	8	7 ~ 8		

I/O Parameters

No.	Parameter name		Default value (Reference)	Input range	Unit	Remarks
94	Stop bit length of SIO channel 1 opened to user	Common	1	1 ~ 2		
95	Parity type of SIO channel 1 opened to use	Common	0	0 ~ 2		0: None 1: Odd 2: Even
96	Receive operation type of SIO channel 1 opened to user	Common	0	0 ~ 1		0: Forcibly enable receive after send 1: Do not forcibly enable receive at send
97	IAI-protocol minimum response delay for SIO channel 1 opened to user	Common	0	0 ~ 999	msec	Valid only with IAI protocol.
98	(Reservation of SIO channel 1 opened to user)	Common	0			
99	(Reservation of SIO channel 1 opened to user)	Common	0			
100	Attribute 1 of SIO channel 2 opened to user (Extension)	Common	68100010H	0H ~ FFFFFFFFH		Bits 28-31: Baud rate type (0: 9.6, 1: 19.2, 2: 38.4, 3: 57.6, 4: 76.8, 5: 115.2k, 6: 230.4kbps) Bits 24-27: Data length (7 to 8) Bits 20-23: Stop bit length (1 to 2) Bits 16-19: Binary Classification (0: None, 1: Odd, 2: Even) Bits 12-15: System reservation Bits 8-11: Reception Operation Classification (0:RS485= Reception compulsorily enabled straight after sending process. RS232C= Reception compulsorily enabled right before sending process 1: Not to have reception compulsorily enabled at sending process Bits 4-7: In-board channel assignment number (1: 1ch, 2: 2ch) Bits 0-3: Extension I/O slot assignment number * Not to be used when set to 0
101	Attribute 2 of SIO channel 2 opened to user (Extension)	Common	0	0H ~ FFFFFFFFH		Bits 0-3: Way to use channels (0: SEL program release 1: System reservation 2: IAI protocol B * I/O Parameter No. 116 “IAI Protocol Communication Attribute” Bit 0 to 3: Available to set when IAI protocol multiple channel communication permission select = 1 (permitted) * Settable only Attribute 2 of SIO channel 2 opened to user) Bits 4-11: IAI protocol response minimum latency (ms) (Valid only in IAI protocol) (Main application part V2.00 or later)
102	Attribute 1 of SIO channel 3 opened to user (Extension)	Common	68100010H	0H ~ FFFFFFFFH		(Equivalent to the IO parameter No.100)
103	Attribute 2 of SIO channel 3 opened to user (Extension)	Common	0	0H ~ FFFFFFFFH		(Equivalent to the IO parameter No.101) (Main application part V2.00 or later)
104	Attribute 1 of SIO channel 4 opened to user (Extension)	Common	68100010H	0H ~ FFFFFFFFH		(Equivalent to the IO parameter No.100)
105	Attribute 2 of SIO channel 4 opened to user (Extension)	Common	0	0H ~ FFFFFFFFH		(Equivalent to the IO parameter No.101) (Main application part V2.00 or later)
106	Attribute 1 of SIO channel 5 opened to user (Extension)	Common	68100010H	0H ~ FFFFFFFFH		(Equivalent to the IO parameter No.100)
107	Attribute 2 of SIO channel 5 opened to user (Extension)	Common	0	0H ~ FFFFFFFFH		(Equivalent to the IO parameter No.101) (Main application part V2.00 or later)
108	SIO system reservation	Common	0	0H ~ FFFFFFFFH		
109	SIO system reservation	Common	0	0H ~ FFFFFFFFH		
110	SIO system reservation	Common	0	0H ~ FFFFFFFFH		
111	SIO system reservation	Common	0	0H ~ FFFFFFFFH		
112	SIO system reservation	Common	0	0H ~ FFFFFFFFH		

I/O Parameters

No.	Parameter name		Default value (Reference)	Input range	Unit	Remarks
113	SIO system reservation	Common	0	0H ~ FFFFFFFFH		
114	SIO system reservation	Common	0	0H ~ FFFFFFFFH		
115	SIO system reservation	Common	0	0H ~ FFFFFFFFH		
116	IAI protocol communication attribute	Common	10	0H ~ FFFFFFFFH		Bits 0-3: IAI protocol multiple channel communication permission select (0: Unpermitted * Communication exclusively in priority of Teaching port > Ethernet 1: Permitted) Bits 4-11: IAI protocol execution command communication valid channel select at AUTO Mode (01H: Teaching Port 02H: Extension SIO (Attribute 2 of SIO channel 2 opened to user) 26H: Ethernet) * Valid when IAI protocol multiple channel communication permission select = 1 (Permitted) * Communication available exclusively in priority of Teaching port > Ethernet at MANU Mode * Reference commands and stop commands (execution commands) are available to communicate with all the channels. (Main application part V2.00 or later)
117	(For extension)	Common	0			
118	(For extension)	Common	0			
119	(For extension)	Common	0			
120	Network attribute 1	Common	640001H	0H ~ FFFFFFFFH		Bits 0 to 3: System reservation Bits 4 to 11: I/O2 fieldbus link error check timer value (10ms) Bits 12 to 15: For future extension Bits 16 to 27: System reservation Bits 28 to 31: Input port data select at I/O2 fieldbus link error (0: Clear, 1: Hold)
121	Network attribute 2	Common	C80000H	0H ~ FFFFFFFFH		Bits 0 to 7: I/O3 fieldbus link error check timer value (10ms) Bits 8 to 11: Input port data select at I/O3 fieldbus link error (0: Clear, 1: Hold) Bits 12 to 15: For future extension Bits 16 to 27: Link timeout value at fieldbus initialization (100msec) Bits 28 to 31: EtherCAT PDO Mapping Type
122	Network attribute 3	Common	0	0H ~ FFFFFFFFH		
123	Network attribute 4	Common	0H	0H ~ FFFFFFFFH		Bits 0 to 3: Selection for permission of 0.0.0.0 (IP address of connection destination ignored) for IP address of connection destination during Ethernet TCP/IP message communication (Server) (0: Do not permit 1: Permit (Not recommended.)) * Note: Number of clients that can be connected simultaneously per server port channel = 1 Bits 4 to 7: Ethernet IAI protocol B/TCP (MANU mode) existence check function select (0: Not used, 1: Use KeepAlive) Bits 8 to 11: Ethernet IAI protocol B/TCP (AUTO mode) existence check function select (0: Not used, 1: Use KeepAlive) Bits 12 to 15: Ethernet free-for-user channel 31 existence check function select (0: Not used, 1: Use KeepAlive) Bits 16 to 19: Ethernet free-for-user channel 32 existence check function select (0: Not used, 1: Use KeepAlive) Bits 20 to 23: Ethernet free-for-user channel 33 existence check function select (0: Not used, 1: Use KeepAlive) Bits 24 to 27: Ethernet free-for-user channel 34 existence check function select (0: Not used, 1: Use KeepAlive) Bits 28 to 31: System reservation * The connection may get cut in case the mating device is not applicable for TCP KeepAlive function.

I/O Parameters

No.	Parameter name		Default value (Reference)	Input range	Unit	Remarks
124	Network attribute 5	Common	0H	0H ~ FFFFFFFFH		Ethernet TCP/IP message communication attribute: Ethernet client-server type (0: Not used 1: Client (Automatic assignment of own port number) 2: System reservation 3: Server (Specification of own port number)) * Note: Number of clients that can be connected simultaneously per server port channel = 1 Bits 0 to 3: IAI protocol B/TCP (MANU mode) Bits 4 to 7: IAI protocol B/TCP (AUTO mode) Bits 8 to 11: User-open channel 31 Bits 12 to 15: User-open channel 32 Bits 16 to 19: User-open channel 33 Bits 20 to 23: User-open channel 34 * If the parameter settings for own port number, client/server type, IP address of connection destination and port number of connection destination do no match completely between the IAI protocol B/TCP MANU and AUTO modes, the connection will be cut off when the MANU/AUTO mode is switched.
125	Network attribute 6	Common	1E32H	0H ~ FFFFFFFFH		Bits 0 to 7: System reservation Bits 8 to 15: System reservation Bits 16 to 23: System reservation
126	Network attribute 7	Common	7D007D0H	0H ~ FFFFFFFFH		Ethernet TCP/IP message communication attribute Bits 0 to 15: System reservation Bits 16 to 31: System reservation
127	Network attribute 8	Common	5050214H	0H ~ FFFFFFFFH		Ethernet TCP/IP message communication attribute Bits 0 to 7: CONNECT_TIMEOUT (Change prohibited) (0 prohibited) (sec) Bits 8 to 15: Connection retry interval (IAI protocol B/TCP) (sec) Bits 16 to 23: Send timeout value (sec) Bits 24 to 31: IAI protocol B- SIO noncommunication confirmation timer value (sec) (IAI protocol B/TCP connection trigger) * I/O Parameter No. 116 “IAI Protocol Communication Attribute” Bits 0 to 3: Valid when IAI Protocol Multiple Channels Communication Permission Select = 0 (Not permitted)
128	Network attribute 9	Common	0H	0H ~ FFFFFFFFH		Ethernet TCP/IP message communication attribute Bits 0 to 15: SEL server open timeout value (sec) (No timeout check, if 0) Bits 16 to 23: System reservation
129	Network attribute 10	Common	0H	0H ~ FFFFFFFFH		Ethernet operation specification Bits 0 to 3: System reservation Bits 4 to 7: TCP/IP message communication (0: Not use, 1: Use) Bits 8 to 31: Reserved (operation specification)
130	Own MAC address (H)	Common	0H	Referency only (HEX)		Only lower two bytes are valid.
131	Own MAC address (L)	Common	0H	Referency only (HEX)		
132	Own IP address (H)	Common	192	1 ~ 255		* Setting of 0 and 127 is prohibited.
133	Own IP address (MH)	Common	168	0 ~ 255		
134	Own IP address (ML)	Common	0	0 ~ 255		
135	Own IP address (L)	Common	1	1 ~ 254		* Setting of 0 and 255 is prohibited.
136	Subnet mask (H)	Common	255	0 ~ 255		
137	Subnet mask (MH)	Common	255	0 ~ 255		
138	Subnet mask (ML)	Common	255	0 ~ 255		
139	Subnet mask (L)	Common	0	0 ~ 255		
140	Default gateway (H)	Common	0	0 ~ 255		
141	Default gateway (MH)	Common	0	0 ~ 255		
142	Default gateway (ML)	Common	0	0 ~ 255		
143	Default gateway (L)	Common	0	0 ~ 255		

I/O Parameters

No.	Parameter name		Default value (Reference)	Input range	Unit	Remarks
144	IAI protocol B/TCP: Own port number (MANU mode)	Common	64511	1025 ~ 65535		* Important: Be sure to set a different number for each own port number. (Duplication is permitted only for own port numbers under IAI protocol B/TCP in the MANU/AUTO modes.) * Port number 44818 cannot be used as a own port. Use the port except for 44818.
145	User-open channel 31 (TCP/IP): Own port number	Common	64512	1025 ~ 65535		
146	User-open channel 32 (TCP/IP): Own port number	Common	64513	1025 ~ 65535		
147	User-open channel 33 (TCP/IP): Own port number	Common	64514	1025 ~ 65535		
148	User-open channel 34 (TCP/IP): Own port number	Common	64515	1025 ~ 65535		
149	IAI protocol B/TCP: IP address of connection destination (MANU mode) (H)	Common	192	0 ~ 255		* Setting of 0 and 127 is prohibited.
150	IAI protocol B/TCP: IP address of connection destination (MANU mode) (MH)	Common	168	0 ~ 255		
151	IAI protocol B/TCP: IP address of connection destination (MANU mode) (ML)	Common	0	0 ~ 255		
152	IAI protocol B/TCP: IP address of connection destination (MANU mode) (L)	Common	100	0 ~ 254		* Setting of 0 and 255 is prohibited.
153	IAI protocol B/TCP: Port number of connection destination (MANU mode)	Common	64611	0 ~ 65535		* 0 can be set, if server. 0 = Port number of connection destination ignored (Only IP address is checked) * 0 cannot be set, if client.
154	IAI protocol B/TCP: IP address of connection destination (AUTO mode) (H)	Common	192	0 ~ 255		* Setting of 0 and 127 is prohibited.
155	IAI protocol B/TCP: IP address of connection destination (AUTO mode) (MH)	Common	168	0 ~ 255		
156	IAI protocol B/TCP: IP address of connection destination (AUTO mode) (ML)	Common	0	0 ~ 255		
157	IAI protocol B/TCP: IP address of connection destination (AUTO mode) (L)	Common	100	0 ~ 254		* Setting of 0 and 255 is prohibited.
158	IAI protocol B/TCP: Port number of connection destination (AUTO mode)	Common	64611	0 ~ 65535		* 0 can be set, if server. 0 = Port number of connection destination ignored (Only IP address is checked) * 0 cannot be set, if client.
159	IAI protocol B/TCP: Own port number (AUTO mode)	Common	64516	1025 ~ 65535		* Important: Be sure to set a different number for each own port number. (Duplication is permitted only for own port numbers under IAI protocol B/TCP in the MANU/AUTO modes.)
160	IP address of vision system I/F1 connection destination (H)	Common	192	0 ~ 255		* Setting of 0 and 127 is prohibited.
161	IP address of vision system I/F1 connection destination (MH)	Common	168	0 ~ 255		
162	IP address of vision system I/F1 connection destination (ML)	Common	0	0 ~ 255		
163	IP address of vision system I/F1 connection destination (L)	Common	102	0 ~ 254		* Setting of 0 and 255 is prohibited.
164	Port number of vision system I/F connection destination (L)	Common	64613	0 ~ 65535		* Vision system I/F is dedicated for IAI controller side client (automatic assignment of own port number) type * Setting of 0 is prohibited.
165	(For network extention)	Common	0			
166	(For network extention)	Common	0			

I/O Parameters

No.	Parameter name		Default value (Reference)	Input range	Unit	Remarks
167	(For network extention)	Common	0			
168	(For network extention)	Common	0			
169	(For network extention)	Common	0			
170	Own MAC address2 (H)	Common	0			Only lower two bytes are valid.
171	Own MAC address2 (L)	Common	0			
172	(For extention)	Common	0			
173	(For extention)	Common	0			
174	(For extention)	Common	0			
175	(For extention)	Common	0			
176	(For extention)	Common	0			
177	(For extention)	Common	0			
178	(For extention)	Common	0			
179	(For extention)	Common	0			
180	(For extention)	Common	0			
181	(For extention)	Common	0			
182	(For extention)	Common	0			
183	(For extention)	Common	0			
184	(For extention)	Common	0			
185	(For extention)	Common	0			
186	(For extention)	Common	0			
187	(For extention)	Common	0			
188	(For extention)	Common	0			
189	(For extention)	Common	0			
190	(For extention)	Common	0			
191	(For extention)	Common	0			
192	(For extention)	Common	0			
193	(For extention)	Common	0			
194	(For extention)	Common	0			
195	(For extention)	Common	0			
196	(For extention)	Common	0			
197	(For extention)	Common	0			
198	(For extention)	Common	0			
199	(For extention)	Common	0			
200	(For extention)	Common	0			
201	(For extention)	Common	0			
202	(For extention)	Common	0			
203	(For extention)	Common	0			
204	(For extention)	Common	0			
205	(For extention)	Common	0			
206	(For extention)	Common	0			
207	(For extention)	Common	0			
208	(For extention)	Common	0			
209	(For extention)	Common	0			
210	(For extention)	Common	0			
211	(For extention)	Common	0			
212	(For extention)	Common	0			
213	(For extention)	Common	0			
214	(For extention)	Common	0			
215	(For extention)	Common	0			
216	(For extention)	Common	0			
217	(For extention)	Common	0			
218	(For extention)	Common	0			
219	(For extention)	Common	0			
220	(For extention)	Common	0			
221	(For extention)	Common	0			
222	(For extention)	Common	0			
223	(For extention)	Common	0			
224	(For extention)	Common	0			

I/O Parameters

No.	Parameter name		Default value (Reference)	Input range	Unit	Remarks
225	Extension I/O control	Common	0H	0H ~ FFFFFFFFH		Bits 0 to 3: I/O2 Module Type Bits 4 to 7: I/O3 Module Type (0: Not mounted 1: I CC-Link, 2: DeviceNet, 3: PROFIBUS, 4: IA-NET (It is applicable for main application part V1.17 and later of the pulse motor type and from the first lot of the AC servomotor type) 5: System reservation, 6: EtherCAT, (It is applicable for main application part V1.17 and later of the pulse motor type and from the first lot of the AC servomotor type) 7: EtherNet/IP, 8: System reservation 9: PIO) A: PROFINET IO (It is applicable for main application part V1.17 and later of the pulse motor type and from the first lot of the AC servomotor type) B: System reservation, C: Extension SIO * EtherNet/IP, IA-NET, PROFINET IO is unavailable for 2-piece mount at same time
226	I/O2 fieldbus node address	Common	0	0 ~ 99999999		· When CC-Link: 1 to 64 · When DeviceNet: 0 to 63 · When PROFIBUS: 0 to 125 · When EtherCAT: 0 to 65535
227	I/O2 fieldbus communication speed	Common	0	0 ~ 9		· When CC-Link: (0: 156kbps, 1: 625kbps, 2: 2.5Mbps, 3: 5Mbps, 4: 10Mbps) · When DeviceNet: (0: 125kbps, 1: 250kbps, 2: 500kbps, 3: Auto) · When EtherNet/IP: (0: Auto negotiation, 1: 10Mbps (Half-duplex), 2: 10Mbps (Full-duplux), 3: 100Mbps (Half-duplex), 4: 100Mbps (Full-duplux)) * Setting unnecessary when PROFIBUS Setting unnecessary when EtherCAT
228	(For extention)	Common	0			
229	(For extention)	Common	0			
230	(For extention)	Common	0			
231	Number of I/O3 fieldbus remote input used ports	Common	0	0 ~ 240		Multiple of 8
232	Number of I/O3 fieldbus remote output used ports	Common	0	0 ~ 240		Multiple of 8
233	Input port start number at I/O3 affixed assignment	Common	-1	-1 ~ 299		0 + (Multiple of 8) (Invalid if a negative value is set)
234	Output port start number at I/O3 affixed assignment	Common	-1	-1 ~ 599		0 + (Multiple of 8) (Invalid if a negative value is set)
235	I/O3 error monitor	Common	1	0 ~ 5		0: Do not monitor 1: Monitor * Some exceptions apply.
236	(For extention)	Common	0			
237	I/O3 fieldbus node address	Common	0	0 ~ 99999999		· When CC-Link: 1 to 64 · When DeviceNet: 0 to 63 · When PROFIBUS: 0 to 125 · When EtherCAT: 0 to 65535
238	I/O3 fieldbus communication speed	Common	0	0 ~ 9		· When CC-Link: (0: 156kbps, 1: 625kbps, 2: 2.5Mbps, 3: 5Mbps, 4: 10Mbps) · When DeviceNet: (0: 125kbps, 1: 250kbps, 2: 500kbps, 3: Auto) · When EtherNet/IP: (0: Auto negotiation, 1: 10Mbps (Half-duplex), 2: 10Mbps (Full-duplux), 3: 100Mbps (Half-duplex), 4: 100Mbps (Full-duplux)) * Setting unnecessary when PROFIBUS Setting unnecessary when EtherCAT
239	(For extention)	Common	0			
240	(For extention)	Common	0			
241	(For extention)	Common	0			
242	(For extention)	Common	0			
243	(For extention)	Common	0			

I/O Parameters

No.	Parameter name		Default value (Reference)	Input range	Unit	Remarks
244	(For extention)	Common	0			
245	(For extention)	Common	0			
246	(For extention)	Common	0			
247	(For extention)	Common	0			
248	(For extention)	Common	0			
249	(For extention)	Common	0			
250	(For extention)	Common	0			
251	(For extention)	Common	0			
252	(For extention)	Common	0			
253	(For extention)	Common	0			
254	(For extention)	Common	0			
255	(For extention)	Common	0			
256	(For extention)	Common	0			
257	(For extention)	Common	0			
258	(For extention)	Common	0			
259	(For extention)	Common	0			
260	(For extention)	Common	0			
261	(For extention)	Common	0			
262	(For extention)	Common	0			
263	(For extention)	Common	0			
264	(For extention)	Common	0			
265	(For extention)	Common	0			
266	(For extention)	Common	0			
267	(For extention)	Common	0			
268	(For extention)	Common	0			
269	(For extention)	Common	0			
270	(For extention)	Common	0			
271	(For extention)	Common	0			
272	(For extention)	Common	0			
273	(For extention)	Common	0			
274	(For extention)	Common	0			
275	(For extention)	Common	0			
276	(For extention)	Common	0			
277	(For extention)	Common	0			
278	(For extention)	Common	0			
279	(For extention)	Common	0			
280	(For extention)	Common	0			
281	(For extention)	Common	0			
282	(For extention)	Common	0			
283	Physical input port number to input function selection 000	Common	-1	-1 ~ 299		Specify the port number to be assigned to the function of I/O Parameter No. 30, “Input function selection 000”. * If a negative value is set, the function will be assigned to input port No. 0.
284	Physical input port number to input function selection 001	Common	-1	-1 ~ 299		Specify the port number to be assigned to the function of I/O Parameter No. 31, “Input function selection 001”. * If a negative value is set, the function will be assigned to input port No. 1.
285	Physical input port number to input function selection 002	Common	-1	-1 ~ 299		Specify the port number to be assigned to the function of I/O Parameter No. 32, “Input function selection 002”. * If a negative value is set, the function will be assigned to input port No. 2.
286	Physical input port number to input function selection 003	Common	-1	-1 ~ 299		Specify the port number to be assigned to the function of I/O Parameter No. 33, “Input function selection 003”. * If a negative value is set, the function will be assigned to input port No. 3.
287	Physical input port number to input function selection 004	Common	-1	-1 ~ 299		Specify the port number to be assigned to the function of I/O Parameter No. 34, “Input function selection 004”. * If a negative value is set, the function will be assigned to input port No. 4.
288	Physical input port number to input function selection 005	Common	-1	-1 ~ 299		Specify the port number to be assigned to the function of I/O Parameter No. 35, “Input function selection 005”. * If a negative value is set, the function will be assigned to input port No. 5.
289	Physical input port number to input function selection 006	Common	-1	-1 ~ 299		Specify the port number to be assigned to the function of I/O Parameter No. 36, “Input function selection 006”. * If a negative value is set, the function will be assigned to input port No. 6.

I/O Parameters

No.	Parameter name		Default value (Reference)	Input range	Unit	Remarks
290	Physical input port number to input function selection 007	Common	-1	-1 ~ 299		Specify the port number to be assigned to the function of I/O Parameter No. 37, “Input function selection 007”. * If a negative value is set, the function will be assigned to input port No. 7. * If “Program number specified for program start” has been specified for input function selection 007, specify in this parameter an input port number whose LSB contains the program number specified for program start.
291	Physical input port number to input function selection 008	Common	-1	-1 ~ 299		Specify the port number to be assigned to the function of I/O Parameter No. 38, “Input function selection 008”. * If a negative value is set, the function will be assigned to input port No. 8. * If “Program number specified for program start” has been specified for input function selection 008, specify in this parameter an input port number whose LSB contains the program number specified for program start.
292	Physical input port number to input function selection 009	Common	-1	-1 ~ 299		Specify the port number to be assigned to the function of I/O Parameter No. 39, “Input function selection 009”. * If a negative value is set, the function will be assigned to input port No. 9. * If “Program number specified for program start” has been specified for input function selection 009, specify in this parameter an input port number whose LSB contains the program number specified for program start.
293	Physical input port number to input function selection 010	Common	-1	-1 ~ 299		Specify the port number to be assigned to the function of I/O Parameter No. 40, “Input function selection 010”. * If a negative value is set, the function will be assigned to input port No. 10. * If “Program number specified for program start” has been specified for input function selection 010, specify in this parameter an input port number whose LSB contains the program number specified for program start.
294	Physical input port number to input function selection 011	Common	-1	-1 ~ 299		Specify the port number to be assigned to the function of I/O Parameter No. 41, “Input function selection 011”. * If a negative value is set, the function will be assigned to input port No. 11. * If “Program number specified for program start” has been specified for input function selection 011, specify in this parameter an input port number whose LSB contains the program number specified for program start.
295	Physical input port number to input function selection 012	Common	-1	-1 ~ 299		Specify the port number to be assigned to the function of I/O Parameter No. 42, “Input function selection 012”. * If a negative value is set, the function will be assigned to input port No. 12. * If “Program number specified for program start” has been specified for input function selection 012, specify in this parameter an input port number whose LSB contains the program number specified for program start.
296	Physical input port number to input function selection 013	Common	-1	-1 ~ 299		Specify the port number to be assigned to the function of I/O Parameter No. 43, “Input function selection 013”. * If a negative value is set, the function will be assigned to input port No. 13. * If “Program number specified for program start” has been specified for input function selection 013, specify in this parameter an input port number whose LSB contains the program number specified for program start.
297	Physical input port number to input function selection 014	Common	-1	-1 ~ 299		Specify the port number to be assigned to the function of I/O Parameter No. 44, “Input function selection 014”. * If a negative value is set, the function will be assigned to input port No. 14. * If “Program number specified for program start” has been specified for input function selection 014, specify in this parameter an input port number whose LSB contains the program number specified for program start.
298	Physical input port number to input function selection 015	Common	-1	-1 ~ 299		Specify the port number to be assigned to the function of I/O Parameter No. 45, “Input function selection 015”. * If a negative value is set, the function will be assigned to input port No. 15.
299	Physical output port number to output function selection 300	Common	0	0 ~ 599		Specify the port number to be assigned to the function of I/O Parameter No. 46, “Output function selection 300”. * If 0 is set, the function will be assigned to output port No. 300.
300	Physical output port number to output function selection 301	Common	0	0 ~ 599		Specify the port number to be assigned to the function of I/O Parameter No. 47, “Output function selection 301”. * If 0 is set, the function will be assigned to output port No. 301.
301	Physical output port number to output function selection 302	Common	0	0 ~ 599		Specify the port number to be assigned to the function of I/O Parameter No. 48, “Output function selection 302”. * If 0 is set, the function will be assigned to output port No. 302.

I/O Parameters

No.	Parameter name		Default value (Reference)	Input range	Unit	Remarks
302	Physical output port number to output function selection 303	Common	0	0 ~ 599		Specify the port number to be assigned to the function of I/O Parameter No. 49, “Output function selection 303”. * If 0 is set, the function will be assigned to output port No. 303.
303	Physical output port number to output function selection 304	Common	0	0 ~ 599		Specify the port number to be assigned to the function of I/O Parameter No. 50, “Output function selection 304”. * If 0 is set, the function will be assigned to output port No. 304.
304	Physical output port number to output function selection 305	Common	0	0 ~ 599		Specify the port number to be assigned to the function of I/O Parameter No. 51, “Output function selection 305”. * If 0 is set, the function will be assigned to output port No. 305.
305	Physical output port number to output function selection 306	Common	0	0 ~ 599		Specify the port number to be assigned to the function of I/O Parameter No. 52, “Output function selection 306”. * If 0 is set, the function will be assigned to output port No. 306.
306	Physical output port number to output function selection 307	Common	0	0 ~ 599		Specify the port number to be assigned to the function of I/O Parameter No. 53, “Output function selection 307”. * If 0 is set, the function will be assigned to output port No. 307.
307	Physical output port number to output function selection 308	Common	0	0 ~ 599		Specify the port number to be assigned to the function of I/O Parameter No. 54, “Output function selection 308”. * If 0 is set, the function will be assigned to output port No. 308.
308	Physical output port number to output function selection 309	Common	0	0 ~ 599		Specify the port number to be assigned to the function of I/O Parameter No. 55, “Output function selection 309”. * If 0 is set, the function will be assigned to output port No. 309.
309	Physical output port number to output function selection 310	Common	0	0 ~ 599		Specify the port number to be assigned to the function of I/O Parameter No. 56, “Output function selection 310”. * If 0 is set, the function will be assigned to output port No. 310.
310	Physical output port number to output function selection 311	Common	0	0 ~ 599		Specify the port number to be assigned to the function of I/O Parameter No. 57, “Output function selection 311”. * If 0 is set, the function will be assigned to output port No. 311.
311	Physical output port number to output function selection 312	Common	0	0 ~ 599		Specify the port number to be assigned to the function of I/O Parameter No. 58, “Output function selection 312”. * If 0 is set, the function will be assigned to output port No. 312.
312	Physical output port number to output function selection 313	Common	0	0 ~ 599		Specify the port number to be assigned to the function of I/O Parameter No. 59, “Output function selection 313”. * If 0 is set, the function will be assigned to output port No. 313.
313	Physical output port number to output function selection 314	Common	0	0 ~ 599		Specify the port number to be assigned to the function of I/O Parameter No. 60, “Output function selection 314”. * If 0 is set, the function will be assigned to output port No. 314.
314	Physical output port number to output function selection 315	Common	0	0 ~ 599		Specify the port number to be assigned to the function of I/O Parameter No. 61, “Output function selection 315”. * If 0 is set, the function will be assigned to output port No. 315.
315	Physical output port number to output function selection 300 (Area 2)	Common	0	0 ~ 599		Specify the port number to be assigned to the function of I/O Parameter No. 331, “Output function selection 300 (Area 2)”. * If 0 is set, the function will not be assigned to any port.
316	Physical output port number to output function selection 301 (Area 2)	Common	0	0 ~ 599		Specify the port number to be assigned to the function of I/O Parameter No. 332, “Output function selection 301 (Area 2)”. * If 0 is set, the function will not be assigned to any port.
317	Physical output port number to output function selection 302 (Area 2)	Common	0	0 ~ 599		Specify the port number to be assigned to the function of I/O Parameter No. 333, “Output function selection 302 (Area 2)”. * If 0 is set, the function will not be assigned to any port.
318	Physical output port number to output function selection 303 (Area 2)	Common	0	0 ~ 599		Specify the port number to be assigned to the function of I/O Parameter No. 334, “Output function selection 303 (Area 2)”. * If 0 is set, the function will not be assigned to any port.
319	Physical output port number to output function selection 304 (Area 2)	Common	0	0 ~ 599		Specify the port number to be assigned to the function of I/O Parameter No. 335, “Output function selection 304 (Area 2)”. * If 0 is set, the function will not be assigned to any port.
320	Physical output port number to output function selection 305 (Area 2)	Common	0	0 ~ 599		Specify the port number to be assigned to the function of I/O Parameter No. 336, “Output function selection 305 (Area 2)”. * If 0 is set, the function will not be assigned to any port.
321	Physical output port number to output function selection 306 (Area 2)	Common	0	0 ~ 599		Specify the port number to be assigned to the function of I/O Parameter No. 337, “Output function selection 306 (Area 2)”. * If 0 is set, the function will not be assigned to any port.
322	Physical output port number to output function selection 307 (Area 2)	Common	0	0 ~ 599		Specify the port number to be assigned to the function of I/O Parameter No. 338, “Output function selection 307 (Area 2)”. * If 0 is set, the function will not be assigned to any port.
323	Physical output port number to output function selection 308 (Area 2)	Common	0	0 ~ 599		Specify the port number to be assigned to the function of I/O Parameter No. 339, “Output function selection 308 (Area 2)”. * If 0 is set, the function will not be assigned to any port.
324	Physical output port number to output function selection 309 (Area 2)	Common	0	0 ~ 599		Specify the port number to be assigned to the function of I/O Parameter No. 340, “Output function selection 309 (Area 2)”. * If 0 is set, the function will not be assigned to any port.
325	Physical output port number to output function selection 310 (Area 2)	Common	0	0 ~ 599		Specify the port number to be assigned to the function of I/O Parameter No. 341, “Output function selection 310 (Area 2)”. * If 0 is set, the function will not be assigned to any port.
326	Physical output port number to output function selection 311 (Area 2)	Common	0	0 ~ 599		Specify the port number to be assigned to the function of I/O Parameter No. 342, “Output function selection 311 (Area 2)”. * If 0 is set, the function will not be assigned to any port.

I/O Parameters

No.	Parameter name		Default value (Reference)	Input range	Unit	Remarks
327	Physical output port number to output function selection 312 (Area 2)	Common	0	0 ~ 599		Specify the port number to be assigned to the function of I/O Parameter No. 343 “Output function selection 312 (Area 2)”. * If 0 is set, the function will not be assigned to any port.
328	Physical output port number to output function selection 313 (Area 2)	Common	0	0 ~ 599		Specify the port number to be assigned to the function of I/O Parameter No. 344, “Output function selection 313 (Area 2)”. * If 0 is set, the function will not be assigned to any port.
329	Physical output port number to output function selection 314 (Area 2)	Common	0	0 ~ 599		Specify the port number to be assigned to the function of I/O Parameter No. 345, “Output function selection 314 (Area 2)”. * If 0 is set, the function will not be assigned to any port.
330	Physical output port number to output function selection 315 (Area 2)	Common	0	0 ~ 599		Specify the port number to be assigned to the function of I/O Parameter No. 346, “Output function selection 315 (Area 2)”. * If 0 is set, the function will not be assigned to any port.
331	Output function selection 300 (Area 2)	Common	0	0 ~ 20		0: General-purpose output 1: Output error of operation-cancellation level or higher (ON) 2: Output error of operation-cancellation level or higher (OFF) 3: Output error of operation-cancellation level or higher + emergency stop (ON) 4: Output error of operation-cancellation level or higher + emergency stop (OFF) 7: Output error of maintenance information alert related message level (error No. 231 to 232) (ON) 8: Output error of maintenance information alert related message level (error No. 231 to 232) (OFF)
332	Output function selection 301 (Area 2)	Common	0	0 ~ 20		0: General-purpose output 1: READY output (PIO trigger program can be run) 2: READY output (PIO trigger program can be run and error of operation-cancellation level or higher is not present) 3: READY output (PIO trigger program can be run and error of cold-start level or higher is not present)
333	Output function selection 302 (Area 2)	Common	0	0 ~ 20		0: General-purpose output 1: Emergency-stop output (ON) 2: Emergency-stop output (OFF)
334	Output function selection 303 (Area 2)	Common	0	0 ~ 5		0: General-purpose output 1: AUTO mode output 2: Output during automatic operation (Other Prameter No. 12)
335	Output function selection 304 (Area 2)	Pulse Motor Type	0	0 ~ 5		0: General-purpose output 1: Output if all valid axes are at home (= 0) 2: Output if all valid axes completed home return (Coordinates confirmed) 3: Output if all valid axes are at preset home coordinates
		AC Servo Motor Type	0	0 ~ 5		0: General-purpose output 1: Output if all valid axes are at home (= 0) 2: Output if all valid axes completed home return (Coordinates confirmed) 3: Output if all valid axes are at preset home coordinates * Use MOVP Command, not HOME Command, when moving the absolute encoder axes to coordinate 0 or home preset coordinate.
336	Output function selection 305 (Area 2)	Common	0	0 ~ 5		0: General-purpose output 1: Axis 1 in-position output (OFF if the work part is missed during push-motion operation) 2: Output when axis-1 servo is ON (System-monitored task output) 3: System reservation
337	Output function selection 306 (Area 2)	Common	0	0 ~ 5		0: General-purpose output 1: Axis 2 in-position output (OFF if the work part is missed during push-motion operation) 2: Output when axis-2 servo is ON (System-monitored task output) 3: System reservation
338	Output function selection 307 (Area 2)	Common	0	0 ~ 5		0: General-purpose output 1: Axis 3 in-position output (OFF if the work part is missed during push-motion operation) 2: Output when axis-3 servo is ON (System-monitored task output) 3: System reservation
339	Output function selection 308 (Area 2)	Common	0	0 ~ 5		0: General-purpose output 1: Axis 4 in-position output (OFF if the work part is missed during push-motion operation) 2: Output when axis-4 servo is ON (System-monitored task output) 3: System reservation
340	Output function selection 309 (Area 2)	Common	0	0 ~ 5		0: General-purpose output
341	Output function selection 310 (Area 2)	Common	0	0 ~ 5		0: General-purpose output
342	Output function selection 311 (Area 2)	Common	0	0 ~ 5		0: General-purpose output
343	Output function selection 312 (Area 2)	Common	0	0 ~ 5		0: General-purpose output

I/O Parameters

No.	Parameter name		Default value (Reference)	Input range	Unit	Remarks
344	Output function selection 313 (Area 2)	Common	0	0 ~ 5		0: General-purpose output
345	Output function selection 314 (Area 2)	Pulse Motor Type	0	0 ~ 5		0: General-purpose output
		AC Servo Motor Type	0	0 ~ 5		0: General-purpose output 1: At absolute data backup battery voltage drop warning level or below (OR check on all axes. Latched to power-on reset / software reset after error level detected.)
346	Output function selection 315 (Area 2)	Common	0	0 ~ 5		0: General-purpose output
347	Error reset input port number	Common	0	0 ~ 299		Execute error reset with ON edge. (Invalid when 0) (Main application part V2.00 or later)
348	(For extention)	Common	0			
349	(For extention)	Common	0			
350	(For extention)	Common	0			
351	Vision system I/F1 function selection 1	Common	3105500H	0H ~ FFFFFFFFH		Bits 0 to 3: Function selection (0: Not used,1: Used) Bits 4 to 7: Communication device selection (0: System reservation, 1: System reservation, 2: Ethernet Ch31, 3: Ethernet Ch32, 4: Ethernet Ch33, 5: Ethernet Ch34) (Related I/O Parameter No. 124, 129 to 143 and 145 to 148) Bits 8 to 11: Vision system I/F1 response timeout value (sec) Bits 12 to 19: Vision system I/F1 image-capturing command OFF delay timer value (msec) Bits 20 to 23: Vision system I/F1 image-capturing delay prediction timer value (msec) Bits 24 to 31: Number of vision system I/F1 image-capturing command retries * No retry at 0
352	Vision system I/F1 function selection 2	Common	0H	0H ~ FFFFFFFFH		Bits 0 to 7: Vision system I/F1 communication format select (0: Format D, 1: System reservation, 2: Format K) (Related I/O Parameter No. 353) Bits 8 to 31: System reservation
353	Vision system I/F1 function selection 3	Common	54313C0DH	0H ~ FFFFFFFFH		Bits 0 to 7: Vision system I/F1 communication delimiter Bits 8 to 15: Vision system I/F1 communication header 1 * No header at 0 Bits 16 to 31: Vision system I/F1 communication header 2 * No header at 0
354	System reservation	Common	0			
355	System reservation	Common	0			
356	Vision system I/F1 initial completion status physical input port number	Common	0	0 ~ 299		* Invalid if “0” is set
357	Vision system I/F1 image-capturing command physical output port number	Common	0	0 ~ 599		
358	(For extention)	Common	0			
359	(For extention)	Common	0			
360	(For extention)	Common	0			
361	(For extention)	Common	0			
362	(For extention)	Common	0			
363	(For extention)	Common	0			
364	(For extention)	Common	0			
365	(For extention)	Common	0			
366	(For extention)	Common	0			
367	(For extention)	Common	0			
368	(For extention)	Common	0			
369	(For extention)	Common	0			
370	(For extention)	Common	0			
371	(For extention)	Common	0			
372	(For extention)	Common	0			

I/O Parameters

No.	Parameter name		Default value (Reference)	Input range	Unit	Remarks
373	(For extention)	Common	0			
374	(For extention)	Common	0			
375	(For extention)	Common	0			
376	(For extention)	Common	0			
378	(For extention)	Common	0			
379	(For extention)	Common	0			
380	Invalid General Use Output Area 2 Number Min. at All Axes Program Finish	Common	0	0 ~ 599		* Caution: The output from this area should be taken place under the responsibility of the user program including “I/O Process Program at Operation Program Finish”. All the outputs except for those from this area should be compulsorily shut off. (Invalid when 0) (It is applicable for main application part V1.17 and later of the pulse motor type and from the first lot of the AC servomotor type)
381	Invalid General Use Output Area 2 Number Max. at All Axes Program Finish	Common	0	0 ~ 599		(It is applicable for main application part V1.17 and later of the pulse motor type and from the first lot of the AC servomotor type
382	(For extention)	Common	0			
383	(For extention)	Common	0			
384	(For extention)	Common	0			
385	(For extention)	Common	0			
386	(For extention)	Common	0			
387	(For extention)	Common	0			
388	(For extention)	Common	0			
389	(For extention)	Common	0			
390	Invalid General Use Output Area 2 Number Min. at All Operation Paused (Servo Axis Software Interlock + Output Port Software Interlock)	Common	0	0 ~ 599		* Caution: The output from this area should be taken place under the responsibility of the user program including “I/O Process Program at All Operation Paused” (including recovery). All the outputs except for those from this area should be compulsorily shut off and paused (only when in automatic operation) with reflecting the result from the operation during the pause of all the operations. (Invalid when 0) (It is applicable for main application part V1.17 and later of the pulse motor type and from the first lot of the AC servomotor type)
391	Invalid General Use Output Area 2 Number Max. at All Operation Paused (Servo Axis Software Interlock + Output Port Software Interlock)	Common	0	0 ~ 599		(It is applicable for main application part V1.17 and later of the pulse motor type and from the first lot of the AC servomotor type)
392	(For extention)	Common	0			
393	(For extention)	Common	0			
394	(For extention)	Common	0			
395	(For extention)	Common	0			
396	(For extention)	Common	0			
397	(For extention)	Common	0			
398	(For extention)	Common	0			
399	(For extention)	Common	0			
400	(For extention)	Common	0			
401 to 601	(For extention)	Common	0			
602	IA Net occupation station top number	Common	0	0 ~ 63		
603	IA Net resizing execution station number	Common	0	0 ~ 63		The station number to optimize the communication cycle time at IA Net startup * Set up the same value in all the controllers in the same network. It is necessary that the resizing execution station is only one in one network. * Indicate the top station number that the controller occupies.
604	IA Net last station number	Common	63	0 ~ 63		The last station number in one network * Set up the same value in all the controllers in the same network. It is necessary that the resizing execution station is only one in one network.
605	IA Net all connection station pattern (31-00)	Common	0H	0H ~ FFFFFFFFH		Make the connection status of Station No. 31 to No. 0 as the bit patterns with 0: Connected, 1: Connected, and input by converting to hexadecimal numbers.
606	IA Net all connection station pattern (63-32)	Common	0H	0H ~ FFFFFFFFH		Make the connection status of Station No. 63 to No. 32 as the bit patterns with 0: Connected, 1: Connected, and input by converting to hexadecimal numbers.

I/O Parameters

No.	Parameter name		Default value (Reference)	Input range	Unit	Remarks
607	IA Net error monitoring	Common	1	0 ~ 5		0: Do not monitor 1: Monitor 2: Monitor (Monitor only link failure related errors) * Some exceptions apply.
608	IA Net attribute 1	Common	F000000H	0H ~ FFFFFFFFH		Bits 0 to 7: Network link error check timer value (10msec) Bits 8 to 19: System reservation Bits 20 to 23: IA Net link error level select (0: Cold start level 1: Message level) Bits 24 to 31: System reservation
609	IA Net attribute 2	Common	F05H	0H ~ FFFFFFFFH		Bits 0 to 7: IAI Protocol B/SIO and IAI Protocol B/TCP non-communication check timer value (sec) (Time till transferred to the status of reception via other controller than IAI Protocol B/IA Net) Bits 8 to 15: IAI Protocol B/IA Net non-communication check timer value (sec) (Time till transferred to the status of command reception via other controller after receiving command via other controller than IAI Protocol B/IA Net) Bits 16 to 23: System reservation
610	IA Net attribute 3	Common	0H	0H ~ FFFFFFFFH		Bits 0 to 3: IA Net baud rate 0: 12Mbps,1: 3Mbps (It is applicable for main application part V1.17 and later of the pulse motor type and from the first lot of the AC servomotor type)
611 to 686	(For extension)	Common				
687	Number of Connected Remote I/O Units (IN Type)	Common	0	0 ~ 7		The number of ports to be used for input should be (Number of connected remote I/O units (IN type) × 32). (It is applicable for main application part V1.17 and later of the pulse motor type and from the first lot of the AC servomotor type)
688	Number of Connected Remote I/O Units (OUT Type)	Common	0	0 ~ 7		The number of ports to be used for output should be (Number of connected remote I/O units (OUT type) × 32). (It is applicable for main application part V1.17 and later of the pulse motor type and from the first lot of the AC servomotor type)
689	Remote I / O unit Input port start number at affixed assignment	Common	-1	-1 ~ 299		0+(Multiple of 8) (Invalid if a negative value is set) (It is applicable for main application part V1.17 and later of the pulse motor type and from the first lot of the AC servomotor type)
690	Remote I / O unit Output port start number at affixed assignment	Common	-1	-1 ~ 599		300+(Multiple of 8) (Invalid if a negative value is set) (It is applicable for main application part V1.17 and later of the pulse motor type and from the first lot of the AC servomotor type)
691	Communication between IA Net controllers Input port start number at affixed assignment	Common	-1	-1 ~ 299		000+(multiple of 8) (Unavailable when it is negative figure)
692	Communication between IA Net controllers Output port start number at affixed assignment	Common	-1	-1 ~ 599		300+(multiple of 8) (Unavailable when it is negative figure)
693	Communication between IA Net controllers Shared memory reference word pattern (31- 00)	Common	0H	0H ~ FFFFFFFFH		0b: Not to refer 1b: To refer * 16 points from 1 word are referred
694	Communication between IA Net controllers Shared memory reference word pattern (63- 32)	Common	0H	0H ~ FFFFFFFFH		0b: Not to refer 1b: To refer * 16 points from 1 word are referred
695	Communication between IA Net controllers Shared memory reference word pattern (95- 64)	Common	0H	0H ~ FFFFFFFFH		0b: Not to refer 1b: To refer * 16 points from 1 word are referred

I/O Parameters

No.	Parameter name		Default value (Reference)	Input range	Unit	Remarks
696	Communication between IA Net controllers Shared memory reference word pattern (127- 96)	Common	0H	0H ~ FFFFFFFFH		0b: Not to refer 1b: To refer * 16 points from 1 word are referred
697	Communication between IA Net controllers Shared memory reference word pattern (159-128)	Common	0H	0H ~ FFFFFFFFH		0b: Not to refer 1b: To refer * 16 points from 1 word are referred
698	Communication between IA Net controllers Shared memory reference word pattern (191-160)	Common	0H	0H ~ FFFFFFFFH		0b: Not to refer 1b: To refer * 16 points from 1 word are referred
699	Communication between IA Net controllers Shared memory reference word pattern (223-192)	Common	0H	0H ~ FFFFFFFFH		0b: Not to refer 1b: To refer * 16 points from 1 word are referred
700	Communication between IA Net controllers Shared memory reference word pattern (255-224)	Common	0H	0H ~ FFFFFFFFH		0b: Not to refer 1b: To refer * 16 points from 1 word are referred
701	Number of communication between IA Net controllers output used ports	Common	0	0 ~ 240		multiple of 16
702 to 704	(For extension)	Common				
705	Extension I/P unit use select	Common	0H	0H ~ FFFFFFFFH		Bits 0 to 3: Slot 1 use select Bits 4 to 7: Slot 2 use select Bits 8 to 11: Slot 3 use select Bits 12 to 15: Slot 4 use select (0: Not use, 1: DO Use, 2: DI Use, 3: DO + DI Use)
706	Extension I/P unit number	Common	1H	0H ~ FH		Set the unit number of extension I/O unit to be used * Extension I/O unit is; ・Top station number = Unit No. x4, ・Number of occupied stations = 4 in IA Net
707	Input port start number at extension I/P unit slot 1 fixed assignment	Common	-1	-1 ~ 299		000+(multiple of 8) (Invalid when a negative value or applicable slot DI not in use) * Automatic assignment conducted from I/O Parameter No. 707 when the setting in I/O Parameter No. 707 is valid and also I/O Parameter No. 709, 711 and 713 are set negative. (Applicable only in DI used slots).
708	Output port start number at extension I/P unit slot 1 fixed assignment	Common	-1	-1 ~ 599		300+(multiple of 8) (Invalid when a negative value or applicable slot DO not in use) * Automatic assignment conducted from I/O Parameter No. 708 when the setting in I/O Parameter No. 708 is valid and also I/O Parameter No. 710, 712 and 714 are set negative. (Applicable only in DO used slots).
709	Intput port start number at extension I/P unit slot 2 fixed assignment	Common	-1	-1 ~ 299		000+(multiple of 8) (Invalid when applicable slot DI not in use) * Automatic assignment conducted from I/O Parameter No. 707 when the setting in I/O Parameter No. 707 is valid and also I/O Parameter No. 709, 711 and 713 are set negative. (Applicable only in DI used slots). Invalid in negative value when in conditions other than above.
710	Outtput port start number at extension I/P unit slot 2 fixed assignment	Common	-1	-1 ~ 599		300+(multiple of 8) (Invalid when applicable slot DO not in use) * Automatic assignment conducted from I/O Parameter No. 708 when the setting in I/O Parameter No. 708 is valid and also I/O Parameter No. 710, 712 and 714 are set negative. (Applicable only in DO used slots). Invalid in negative value when in conditions other than above.
711	Intput port start number at extension I/P unit slot 3 fixed assignment	Common	-1	-1 ~ 299		000+(multiple of 8) (Invalid when applicable slot DI not in use) * Automatic assignment conducted from I/O Parameter No. 707 when the setting in I/O Parameter No. 707 is valid and also I/O Parameter No. 709, 711 and 713 are set negative. (Applicable only in DI used slots). Invalid in negative value when in conditions other than above.

I/O Parameters

No.	Parameter name		Default value (Reference)	Input range	Unit	Remarks
712	Outtput port start number at extension I/P unit slot 3 fixed assignment	Common	-1	-1 ~ 599		300+(multiple of 8) (Invalid when applicable slot DO not in use) * Automatic assignment conducted from I/O Parameter No. 708 when the setting in I/O Parameter No. 708 is valid and also I/O Parameter No. 710, 712 and 714 are set negative. (Applicable only in DO used slots). Invalid in negative value when in conditions other than above.
713	Intput port start number at extension I/P unit slot 4 fixed assignment	Common	-1	-1 ~ 299		000+(multiple of 8) (Invalid when applicable slot DI not in use) * Automatic assignment conducted from I/O Parameter No. 707 when the setting in I/O Parameter No. 707 is valid and also I/O Parameter No. 709, 711 and 713 are set negative. (Applicable only in DI used slots). Invalid in negative value when in conditions other than above.
714	Outtput port start number at extension I/P unit slot 4 fixed assignment	Common	-1	-1 ~ 599		300+(multiple of 8) (Invalid when applicable slot DO not in use) * Automatic assignment conducted from I/O Parameter No. 708 when the setting in I/O Parameter No. 708 is valid and also I/O Parameter No. 710, 712 and 714 are set negative. (Applicable only in DO used slots). Invalid in negative value when in conditions other than above.
715	Extension I/O unit error monitor	Common	1	0 ~ 5		0: Unmonitored, 1: Monitor 2: Monitor (Not to monitor 24V I/O power related errors) 3: Monitor (Monitor only 24V I/O power related errors) * There are some exceptions * When the setting is established to 0 (= Not to monitor) or 2 (= Monitor (Not to monitor 24V I/O power related errors)), the system would not generate a system error in a 24V I/O power related error. However, to protect the extension I/O unit, the actual output of the digital I/O board will be shut in the circuit afterwards.
716	Extension I/O unit multi-channel DIO external terminal block overcurrent and power supply error detection input indication	Common	0H	0H ~ FFFFFFFFH		Bits 4 to 7: Extension I/O unit slot 2 input indication Bits 8 to 11: Extension I/O unit slot 3 input indication Bits 12 to 15: Extension I/O unit slot 4 input indication (0: Not to input error detection 1: Error detection input = IN023 in card 2: Error detection input = card IN047 3: Error detection input = card IN 023/47) * Establish the setting by checking the specifications of the terminal block unit for multi-channel DIO to be connected. * The input port used as an error detection input cannot be used as a general-purposed input port.
717 to 999	(For extension)	Common				

5.2 All Axes Common Parameters

* It is described as “In Common” when the statement of a parameter should be the same for the pulse motor type and AC servo motor type.

No.	Parameter name		Default value (Reference)	Input range	Unit	Remarks
				~		
1	Effective axis pattern	Common	0000B	0B ~ 11111111B		
2	Default override	Common	100	1 ~ 100		Used if not specified in program. (Invalid for SIO operation)
3	(For extension)	Common	0	~		
4	(For extension)	Common	0	~		
5	(For extension)	Common	0	~		
6	(For extension)	Common	0	~		
7	(For extension)	Common	0	~		
8	(For extension)	Common	0	~		
9	Enable switch (dead man’s switch/safety gate) enable physical axis pattern	Common	11111111B	00B ~ 11111111B		Not affected by a BASE command. Always specify 11111111 if all axes are used. Enable switch is included in the driving cutoff cause only when 11111111 is indicated, turns the servo OFF only on the indicated axis without any drive cutoff when indicated other than 11111111. * When [Other Prameter No. 11 enable switch (dead man’s switch/safety gate) open recovery type] = 1 (reset recovery necessary), it is identified as all the axes indicated.
10	System reservation	Common	0	0H ~ FFFFFFFFH		
11	Default acceleration	Common	20	1 ~ 200	0.01G	Used if not specified in position data, program or SIO message, etc.
12	Default deceleration	Common	20	1 ~ 200	0.01G	Used if not specified in position data, program or SIO message, etc.
13	Default speed	Common	30	1 ~ 250	mm/s	Used if not specified in SIO message or position data when movement is to be continued, etc.
14	Operation position data deceleration rate 0 effective select	Common	0	0 ~ 5		0: “Deceleration = Acceleration” when the deceleration in the operation point data is “0” 1: “Deceleration = 0” when the deceleration in the operation point data is “0”
15	Maximum JOG speed when home return is incomplete	Common	30	1 ~ 250	mm/s	
16	System reservation	Common	0	0B ~ 11111111B		
17	System reservation	Common	0	-99999999 ~ 99999999		
18	(For extension)	Common	0	~		
19	System reservation	Common	0	0 ~ 9		
20	Maximum operating speed check timing	Common	1	0 ~ 1		0: Check at input 1: Check at operation * If “Check at operation” is selected, the distribution speed (CP) of specified speed or the specified speed (PTP) will be compared against the maximum operating speed of each axis and clamped at the allowable speed. Accordingly, the system can achieve its maximum performance in accordance with the operation command. However, complete check cannot be performed at input (since the command/operation start position is indeterminable). In the case of CP, the distribution speed will vary depending on the operation start position. Therefore, specifying CP at an unspecified position (first point movement, etc.) will cause the speed to fluctuate depending on where the operation is started.
21	Maximum operating speed for input value check	Common	300	1 ~ 9999	mm/s	If “Input” is selected as the maximum speed check timing, this parameter will be used to check for input error.
22	Maximum acceleration	Common	100	1 ~ 999	0.01G	
23	Maximum deceleration	Common	100	1 ~ 999	0.01G	
24	Minimum emergency deceleration	Common	30	1 ~ 300	0.01G	
25	System reservation	Common	30	1 ~ 300	0.01G	
26	System reservation	Common	0	0 ~ 5		
27	System reservation	Common	0	0 ~ 5		
28	Selection of inching → jog auto-switching prohibition	Common	0	0 ~ 5		0: Execute auto-switching (Continuous button ON timer), 1: Prohibited * Referenced by the PC/TP

All Axes Common Parameters

No.	Parameter name		Default value (Reference)	Input range	Unit	Remarks
29	All-axis setting bit pattern 1	Common	0	0H ~ FFFFFFFFH		Bits 0 to 3: Selection of use of last PC/TP inching distance (0: Do not use, 1: Use) * Referenced by the PC/TP (Excluding ANSI-compliant TP) Bits 8 to 11: "Actual-position soft limit over (Servo)" error level (0: Operation-cancellation level, 1: Cold-start level, 2: Operation-cancellation level at reset, thereafter cold-start level)
30	Default division angle	Common	150	0 ~ 1200	0.1 degree	
31	Default division distance	Common	0	0 ~ 10000	mm	
32	Arch-trigger start-point check type	Common	0	0 ~ 5		0: Check operation amount and actual position, 1: Check operation amount only
33	Safety speed in manual mode	Common	250	1 ~ 250	mm/s	* This setting is handled as a value equal to or smaller than the minimum value among all valid axes "Axis-Specific Parameter No. 29, VLMX speed."
34	System reservation	Common	0	1 ~ 10		
35	System reservation	Common	0	1 ~ 10		
36	System reservation	Common	0	1 ~ 10		
37	System reservation	Common	0	1 ~ 500		
38	System reservation	Common	0	0 ~ 5		
39	System reservation	Common	0	0 ~ 999999		
40	(For extension)	Common	0	~		
41	(For extension)	Common	0	~		
42	All-axis setting bit pattern 2	Common	0H	0H ~ FFFFFFFFH		Bits 0 to 3: System reservation Bits 4 to 7: System reservation Bits 8 to 31: (Reservation)
43	(For extension)	Common	0	~		
44	System reservation	Common	0	0 ~ 50		
45	System reservation	Common	0	0 ~ 999999		
46	System reservation	Common	0	100 ~ 9999		
47	System reservation	Common	0	1 ~ 100		
48	System reservation	Common	0	1 ~ 100		
49	System reservation	Common	0	1 ~ 100		
50	System reservation	Common	0	0 ~ 9999		
51	System reservation	Common	0H	0H ~ FFFFFFFFH		
52	(For extension)	Common	0	~		
53	System reservation	Common	0	100 ~ 9999		
54	All-axis setting bit pattern 3	Common	0H	0H ~ FFFFFFFFH		Bits 0 to 3: System reservation Bits 4 to 7: Position output operation data valid select (0: Invalid, 1: Valid) * Attention: When changing valid/invalid, it is necessary to initialize the position data (Error No. 6BD "Position Data Construction Change Error"). Make sure to back up the position data before making change. (Main application part V2.00 or later) Bits 8 to 11: Each Axis Pressing Speed Max. Control Feature Select (0: Invalid, 1: Valid) (Main application part V2.00 or later)
55	Coordinate System Definition 1 Control	Common	0H	0H ~ FFFFFFFFH		Bits 0 to 3: Unit Valid Indication (0: Invalid, 1: Valid) (Main application part V2.00 or later) Bits 4 to 31: Reservation
56	Coordinate System Definition 1 Constructing Axis Setting	Common	0H	0H ~ FFFFFFFFH		Bits 0 to 3: X Indicated Axis Number Bits 4 to 7: Y Indicated Axis Number Bits 8 to 11: Z Indicated Axis Number Bits 12 to 15: R Indicated Axis Number Bits 16 to 31: Reservation (Bits 0 to 15: · · · Main application part V2.00 or later) (No applicable definition axis when Axis No. = 0)
57	Coordinate System Definition 1 R-Axis Coordinates Direction Setting	Common	0	0 ~ 1		Relation between direction of rotation from X-axis to Y-axis and R-axis direction in base coordinate system 0: Same direction 1: Opposite direction (Main application part V2.00 or later)
58	(For extension)	Common	0	~		
59	(For extension)	Common	0	~		
60	(For extension)	Common	0	~		
61	(For extension)	Common	0	~		
62	(For extension)	Common	0	~		
63	(For extension)	Common	0	~		

All Axes Common Parameters

No.	Parameter name		Default value (Reference)	Input range	Unit	Remarks
64	(For extension)	Common	0	~		
65	(For extension)	Common	0	~		
66	(For extension)	Common	0	~		
67	(For extension)	Common	0	~		
68	(For extension)	Common	0	~		
69	(For extension)	Common	0	~		
70	(For extension)	Common	0	~		
71	(For extension)	Common	0	~		
72	(For extension)	Common	0	~		
73	(For extension)	Common	0	~		
74	(For extension)	Common	0	~		
75	(For extension)	Common	0	~		
76	(For extension)	Common	0	~		
77	(For extension)	Common	0	~		
78	(For extension)	Common	0	~		
79	(For extension)	Common	0	~		
80	(For extension)	Common	0	~		
81	(For extension)	Common	0	~		
82	(For extension)	Common	0	~		
83	(For extension)	Common	0	~		
84	(For extension)	Common	0	~		
85	(For extension)	Common	0	~		
86	(For extension)	Common	0	~		
87	(For extension)	Common	0	~		
88	(For extension)	Common	0	~		
89	(For extension)	Common	0	~		
90	(For extension)	Common	0	~		
91	(For extension)	Common	0	~		
92	(For extension)	Common	0	~		
93	(For extension)	Common	0	~		
94	(For extension)	Common	0	~		
95	(For extension)	Common	0	~		
96	(For extension)	Common	0	~		
97	(For extension)	Common	0	~		
98	(For extension)	Common	0	~		
99	(For extension)	Common	0	~		
100	(For extension)	Common	0	~		
101	(For extension)	Common	0	~		
102	(For extension)	Common	0	~		
103	(For extension)	Common	0	~		
104	(For extension)	Common	0	~		
105	(For extension)	Common	0	~		
106	(For extension)	Common	0	~		
107	(For extension)	Common	0	~		
108	(For extension)	Common	0	~		
109	(For extension)	Common	0	~		
110	(For extension)	Common	0	~		
111	(For extension)	Common	0	~		
112	(For extension)	Common	0	~		
113	(For extension)	Common	0	~		
114	(For extension)	Common	0	~		
115	(For extension)	Common	0	~		
116	(For extension)	Common	0	~		
117	(For extension)	Common	0	~		
118	(For extension)	Common	0	~		
119	(For extension)	Common	0	~		
120	(For extension)	Common	0	~		
121	Vision system I/F1 coordinate axis definition	Common	4321H	0H ~ FFFFFFFFH		Bits 0 to 3: X-oriented axis number Bits 4 to 7: Y-oriented axis number Bits 8 to 11: Z-oriented axis number Bits 12 to 15: R-oriented axis number Bits 16 to 31: Reserved
122	Vision system I/F1 coordinate datum offset X	Common	0	-99999999 ~ 99999999	0.001mm	Robot coordinate X on vision system I/F1 coordinate (X = 0, Y = 0) • Setting is established in vision system I/F adjustment.
123	Vision system I/F1 coordinate datum offset Y	Common	0	-99999999 ~ 99999999	0.001mm	Robot coordinate Y on vision system I/F1 coordinate (X = 0, Y = 0) • Setting is established in vision system I/F adjustment.

All Axes Common Parameters

No.	Parameter name		Default value (Reference)	Input range	Unit	Remarks
124	Vision system I/F1 coordinate offset angle	Common	0	-99999999 ~ 99999999	0.001deg	Rotation angle of vision system I/F1 coordinate with robot coordinate as datum • Setting is established in vision system I/F adjustment.
125	Vision system I/F1 Z-axis direction vision system position judgment datum	Common	0	-99999999 ~ 99999999	0.001mm	(Related information: All Axes Common Parameter No. 130) • Setting is established in vision system I/F adjustment.
126	Vision system I/F1 X-axis (GTVD acquirement data) tuning offset	Common	0	-99999 ~ 99999	0.001mm	
127	Vision system I/F1 Y-axis (GTVD acquirement data) tuning offset	Common	0	-999999 ~ 99999	0.001mm	
128	Vision system I/F1 R-axis (GTVD acquirement data) tuning offset	Common	0	-360000 ~ 360000	0.001deg	
129	Vision system I/F1 control 1	Common	0H	0H ~ FFFFFFFFH		Bits 0 to 3: System reservation (Change prohibited) Bits 4 to 11: System reservation (Change prohibited) Bits 12 to 19: System reservation (Change prohibited) Bits 13 to 23: R-axis tuning signal reverse (0: No signal reverse, 1: Signal reversed) Bits 24 to 31: Reserved
130	Vision system I/F1 control 2	Common	0H	0H ~ FFFFFFFFH		Bits 0 to 7: Z-axis direction position judgment datum distance [0.1mm] (Ineffective at 0 when mounted on robot) * Effective only when all axes common No. 130 bit 8 to 11 = 1 Bits 8 to 11: Vision installation type (0: Fixed installation (not on robot), 1: Installed on robot) • Setting is established in vision system I/F adjustment. Bits 12 to 31: Reserved
131	System reservation	Common	0	0 ~ 5		
132	System reservation	Common	0	1 ~ 99999999		
133	System reservation	Common	0	1 ~ 99999999		
134	(For extension)	Common	0	~		
135	(For extension)	Common	0	~		
136	System reservation	Common	0H	0H ~ FFFFFFFFH		
137	System reservation	Common	0	0 ~ 99999999		
138	(For extension)	Common	0	~		
139	System reservation	Common	0	1 ~ 99999999		
140	System reservation	Common	0	1 ~ 99999999		
141	(For extension)	Common	0	~		
142	(For extension)	Common	0	~		
143	(For extension)	Common	0	~		
144	(For extension)	Common	0	~		
145	(For extension)	Common	0	~		
146	(For extension)	Common	0	~		
147	(For extension)	Common	0	~		
148	(For extension)	Common	0	~		
149	(For extension)	Common	0	~		
150	(For extension)	Common	0	~		
151 to 400	(For extension)	Common	0	~		

5.3 Axis-Specific Parameters

* It is described as “In Common” when the statement of a parameter should be the same for the pulse motor type and AC servo motor type.

No.	Parameter name		Default value (Reference)	Input range	Unit	Remarks
				~		
1	Axis operation type	Common	0	0 ~ 1		0: Linear movement axis 1: Rotational movement axis (Angle control)
2	(For extension)	Common	0	~		
3	(For extension)	Common	0	~		
4	(For extension)	Common	0	~		
5	(For extension)	Common	0	~		
6	Coordinate/physical-operation direction selection	Pulse Motor Type	1	0 ~ 1		0: Motor CCW → Negative direction on the coordinate system 1: Motor CCW → Positive direction on the coordinate system
		AC Servo Motor Type	1	0 ~ 1		0: Motor CCW → Positive direction on the coordinate system 1: Motor CCW → Negative direction on the coordinate system
7	Soft limit +	Common	50000	-99999999 ~ 99999999	0.001 mm	Fixed to 359.999 degrees internally in the index mode. Invalid in the infinite-stroke mode.
8	Soft limit –	Common	0	-99999999 ~ 99999999	0.001 mm	Fixed to 0 degree internally in the index mode. Invalid in the infinite-stroke mode.
9	Soft-limit actual position margin	Common	2000	0 ~ 9999	0.001 mm	Actual position margin in the positioning boundary critical zone in the infinite-stroke mode
10	Home-return method	Pulse Motor Type	0	0 ~ 5		0: Search phase Z after end search (Offset operation after end search for actuator without Z-phase) 1: Current position 0 home (This parameter can be specified only with an incremental encoder. Pay attention to contact.), 2: Current position = Preset home (This parameter can be specified only with an incremental encoder. Pay attention to contact.) 3: System reservation 4: Home position sensor detection range center point calculation method (Main application Ver. 1.06 or later)
		AC Servo Motor Type	0	0 ~ 5		0: Search phase Z after end search (Offset operation after end search for actuator without Z-phase) 1: Current position 0 home (This parameter can be specified only with an incremental encoder. Pay attention to contact.), 2: Current position = Preset home (This parameter can be specified only with an incremental encoder. Pay attention to contact.) 3: System reservation 4: System reservation
11	Home-return end-search direction selection	Common	0	0 ~ 1		0: Negative end of the coordinate system 1: Positive end of the coordinate system
12	Home preset value	Common	0	-99999999 ~ 99999999	0.001 mm	
13	SIO/PIO home-return order	Common	0	0 ~ 16		Executed from the smallest one.
14	Home-sensor input polarity	Common	0	0 ~ 4		0: Do not use 1: Contact a (End detection sensor (End equivalent)) 2: Contact b (End detection sensor (End equivalent)) 3: Contact a (Home check sensor (Mechanical end vicinity check)) 4: Contact b (Home check sensor (Mechanical end vicinity check))
15	System reservation	Common	0	0 ~ 2		
16	System reservation	Common	0	0 ~ 2		
17	System reservation	Common	10	1 ~ 100	mm/sec	
18	System reservation	Common	100	1 ~ 500	mm/sec	
19	End search speed at home return	Common	20	1 ~ 100	mm/sec	
20	Phase-Z search speed at home return	Common	3	1 ~ 50	mm/sec	Exercise caution, since limitations apply depending on the read/encoder pulse count.

Axis-Specific Parameters

No.	Parameter name		Default value (Reference)	Input range	Unit	Remarks
21	Offset travel distance at home return	Pulse Motor Type	2500	-99999999 ~ 99999999	0.001mm	Offset travel distance from the ideal phase-Z position (Positive value = Applied in the direction of moving away from the end)
		AC Servo Motor Type	1000	-99999999 ~ 99999999	0.001mm	Offset travel distance from the ideal phase-Z position (Positive value = Applied in the direction of moving away from the end) * Caution for Absolute Encoder If an integer multiplied vicinity number to the distance between Z-phases is set to this parameter, there could be a concern that the coordinate slide for a pitch of a pulse between Z-phases as the servo lock may occur on the Z-phase at the absolute reset. Make sure that you will never establish the setting to an integer multiplied vicinity number to the distance between Z-phases. Ensure enough margin to the servo system vibration width.）
22	Allowable value for phase Z position error check during home return	Common	0	0 ~ 99999999	0.001mm	Allowable actual minimum distance between the end (Mechanical or LS) and phase Z when a rotary encoder is used.
23	System reservation	Common	1	1 ~ 8		
24	Push stop check time at home return	Common	1500	1 ~ 5000	msec	Used to confirm pusing action at the time of home return.
25	Push stop check time at positioning	Common	500	1 ~ 5000	msec	Used to confirm pusing action according to the PUSH command.
26	System reservation	Common	1000	0 ~ 99999	0.001mm	
27	System reservation (Change prohibited)	Pulse Motor Type	5000	1 ~ 99999	rpm.mm/ sec	Rpm value in the case of a rotary encoder (Change prohibited)
		AC Servo Motor Type	10000	1 ~ 99999	rpm.mm/ sec	
28	Maximum operating speed of each axis	Common	800	1 ~ 9999	mm/s	
29	VLMX speed	Common	800	1 ~ 9999	mm/s	During VLMX operation, the maximum operating speed of each axis or VLMX speed, whichever is lower, is used as the maximum speed of the applicable axis.
30	Servo ON check time	Common	20	0 ~ 5000	msec	Brake equipped: Time after receiving a servo-ON start response until start of brake unlocking Brake not equipped: Time after receiving a servo ON start response until transition to an operation-enabled status
31	Offset travel speed at home return	Common	3	1 ~ 500	mm/sec	
32	Actual distance between phase Z and end	Common	0	-1 ~99999	0.001mm	Absolute distance from the end (Mechanical or LS). Obtained automatically if the distance is a negative value. When multiple actuators are combined, it is recommended to write the flash ROM after automatic acquisition.
33	Ideal distance between phase Z and end	Common	0	0 ~ 99999	0.001mm	Absolute distance from the end (Mechanical or LS).
34	Brake equipment specification	Common	0	0 ~ 1		0: Not equipped 1: Equipped
35	Brake unlock check time	Common	10	0 ~ 3000	msec	Time after receiving a brake-unlock start response until transition to an operation-enabled status
36	Brake lock check time	Common	10	0 ~ 1000	msec	Time after receiving a brake-lock start response until start of servo OFF
37	System reservation	Common	0	0 ~ 1		
38	Encoder ABS/INC type	Pulse Motor Type	2	0 ~ 2		2: Battery-less Absolute
		AC Servo Motor Type	1	0 ~ 2		1: Battery-less Absolute
39	System reservation	Common	1	0 ~ 1		
40	System reservation	Common	0	0 ~ 1		
41	System reservation	Common	25	0 ~ 100	DRVVR	
42	Encoder resolution	Common	800	0 ~ 99999999	Pulse/rev , 0.001 μm/pulse	Pulses (before division)/rev, in the case of a rotary encoder
43	Encoder division ratio	Common	0	-7 ~ 7		Pulses are multiplied by (“n” th power of 1/2).
44	Length measurement correction	Common	0	-99999999 ~ 99999999	0.001mm /1M	Valid only for linear movement axes. (Coordinates other than the encoder reference Z point will change proportionally.)
45	(For extension)	Common	0			
46	(For extension)	Common	0			

Axis-Specific Parameters

No.	Parameter name		Default value (Reference)	Input range	Unit	Remarks
47	Screw lead	Common	16000	-1 ~ 99999999	0.001mm	Valid only for linear movement axes.
48	(For extension)	Common	0			
49	(For extension)	Common	0			
50	Gear ratio numerator	Common	15	1 ~ 99999999		
51	Gear ratio denominator	Common	10	1 ~ 99999999		
52	(For extension)	Common	0			
53	Setting bit pattern 1 of each axis	Common	0	0H ~ FFFFFFFFH		
54	Travel distance for push stop detection at home return	Common	20	1 ~ 99999	0.001mm	Used to confirm pusing action at the time of home return.
55	Travel distance for push stop detection at positioning	Common	30	1 ~ 99999	0.001mm	Used to confirm pusing action according to the PUSH command.
56	Push-abort deviation ratio at home return	Common	5000	1 ~ 99999		Deviation is compared against “Steady-state deviation of push speed + Push-speed pulse speed × Abort deviation ratio.
57	Push-abort deviation ratio at positioning	Common	5000	1 ~ 99999		Deviation is compared against “Steady-state deviation of push speed + Push-speed pulse speed × Abort deviation ratio.
58	Positioning band	Common	100	1 ~ 9999	0.001mm	
59	Allowable deviation error ratio (Maximum speed pulse ratio)	Pulse Motor Type	218	1 ~ 9999		Deviation is compared against “Steady-state deviation of maximum operating speed of each axis + Pulse speed of maximum operating speed of each axis × Allowable deviation error ratio.”
		AC Servo Motor Type	27	1 ~ 9999		Deviation is compared against “Steady-state deviation of maximum operating speed of each axis + Pulse speed of maximum operating speed of each axis × Allowable deviation error ratio.”
60	Position gain	Common	50	1 ~ 9999	/s	
61	System reservation	Common	0	0 ~ 500	%	
62	System reservation	Common	77	0 ~ 1000		
63	Stop special output range	Common	0	0 ~ 9999	pulse	Invalid if “0” is set.
64	Stop special output value	Common	0	0 ~ 999	DRVVR	
65	System reservation	Common	0	0 ~ 8		
66	Mode selection for rotational movement axis	Common	0	0 ~ 5		0: Normal 1: Index mode
67	Short-cut control selection for rotational movement axis	Common	0	0 ~ 5		0: Do not select 1: Select (Valid only in the index mode and when an incremental encoder is used)
68	Mode selection for linear movement axis	Common	0	0 ~ 5		0: Normal 1: Infinite-stroke mode (Note: Positioning boundary applies. This setting can be specified only when an incremental encoder is used.)
69	(For extension)	Common	0	~		
70	System reservation	Common	32767	0 ~ 32767	DRVVR	(Change prohibited)
71	System reservation	Common	32767	0 ~ 32767	DRVVR	(Change prohibited)
72	System reservation	Common	1	-999 ~ 999	DRVVR	(Change prohibited) To maintain symmetry of the positive and negative sides.
73	System reservation	Common	0	-999 ~ 999	DRVVR	(Change prohibited) To maintain symmetry of the positive and negative sides.
74	System reservation	Common	32436	0 ~ 32767	DRVVR	(Change prohibited)
75	System reservation	Common	-32435	0 ~ -32767	DRVVR	(Change prohibited)
76	System reservation	Common	1	0 ~ 1		(Change prohibited)
77	System reservation	Common	3	0 ~ 99999	pulse	
78	Maximum takeoff command amount	Common	0	-3000 ~ 3000	0.001mm	Maximum lift command amount before brake unlock (Input with sign) (Suppression of momentary drop upon servo ON when a heavy object is placed) * Important: Input using the same sign as the rising coordinate direction. (0.100 mm to 0.500 mm in absolute value as a guideline) * The servo-ON check time (Axis-Specific Parameter No. 30) must also be extended (Approx. 1000 to 1500 msec) to provide a sufficient time for rise-direction torque to follow. (Valid only when installation of brake is specified.)
79	Actual takeoff check distance	Common	5	0 ~ 3000	0.001mm	Absolute value input
80	Maximum forced-feed range	Common	0	0 ~ 9999	0.001mm	For reduction of settling time. (Invalid range if “0” is set) (Approx. 1.000 mm as a guideline)
81	Minimum forced-feed range	Common	200	0 ~ 9999	0.001mm	
82	Medium forced-feed range	Common	600	0 ~ 9999	0.001mm	
83	System reservation	Common	0	0 ~ 5		

Axis-Specific Parameters

No.	Parameter name		Default value (Reference)	Input range	Unit	Remarks
84	System reservation	Common	0	0 ~ 100	mm/sec	
85	Home-return acceleration/deceleration	Common	15	1 ~ 300	0.01G	
86	Zone 1 maximum	Common	0	-99999999 ~ 99999999	0.001mm	Valid only when maximum > minimum * Must be inside the range for at least 3 msec.
87	Zone 1 minimum	Common	0	-99999999 ~ 99999999	0.001mm	Valid only when maximum > minimum * Must be inside the range for at least 3 msec.
88	Zone 1 output number	Common	0	0 ~ 899		Physical output port or global flag (Output is invalid if “0” is set; multiple specification is invalid)
89	Zone 2 maximum	Common	0	-99999999 ~ 99999999	0.001mm	Valid only when maximum > minimum * Must be inside the range for at least 3 msec.
90	Zone 2 minimum	Common	0	-99999999 ~ 99999999	0.001mm	Valid only when maximum > minimum * Must be inside the range for at least 3 msec.
91	Zone 2 output number	Common	0	0 ~ 899		Physical output port or global flag (Output is invalid if “0” is set; multiple specification is invalid)
92	Zone 3 maximum	Common	0	-99999999 ~ 99999999	0.001mm	Valid only when maximum > minimum. * Must be inside the range for at least 3 msec.
93	Zone 3 minimum	Common	0	-99999999 ~ 99999999	0.001mm	Valid only when maximum > minimum * Must be inside the range for at least 3 msec.
94	Zone 3 output number	Common	0	0 ~ 899		Physical output port or global flag (Output is invalid if “0” is set ; multiple specification is invalid)
95	Zone 4 maximum	Common	0	-99999999 ~ 99999999	0.001mm	Valid only when maximum. > minimum * Must be inside the range for at least 3 msec.
96	Zone 4 minimum	Common	0	-99999999 ~ 99999999	0.001mm	Valid only when maximum > minimum * Must be inside the range for at least 3 msec.
97	Zone 4 output number	Common	0	0 ~ 899		Physical output port or global flag (Output is invalid if “0” is set; multiple specification is invalid)
98	Complete stop mode transition stop band	Pulse Motor Type	4	0 ~ 5	pulse	(For pulse motor) * Set a value equal to or less than the pulse conversion value in Each Axis No. 58 “Positioning Band”.
	System reservation	AC Servo Motor Type	0			
99	Deviation buffer number designation for complete stop mode transition judgment	Pulse Motor Type	2	0 ~ 4		(For pulse motor)
	System reservation	AC Servo Motor Type	0			
100	(For extension)	Common	0	~		
101	(For extension)	Common	0	~		
102	(For extension)	Common	0	~		
103	(For extension)	Common	0	~		
104	(For extension)	Common	0	~		
105	(For extension)	Common	0	~		
106	(For extension)	Common	0	~		
107	(For extension)	Common	0	~		
108	(For extension)	Common	0	~		
109	(For extension)	Common	0	~		
110	(For extension)	Common	0	~		
111	(For extension)	Common	0	~		
112	(For extension)	Common	0	~		
113	(For extension)	Common	0	~		
114	(For extension)	Common	0	~		
115	(For extension)	Common	0	~		
116	(For extension)	Common	0	~		
117	(For extension)	Common	0	~		
118	(For extension)	Common	0	~		
119	FSG	Common	0	0 ~ 100		
120	FFF	Common	10	0 ~ 100		* Change is prohibited unless instructed by the manufacturer.
121 to 130	(For extension)	Common	0	~		
131	(For extension)	Common	0	~		
132	Setting bit pattern 3 of each axis	Common	14H	0H ~ FFFFFFFFH		
133	(For extension)	Common	0	~		
134	System reservation	Common	0	1 ~ 99999999		
135	System reservation	Common	0	1 ~ 99999999		
136	System reservation	Common	0	1 ~ 99999999		

Axis-Specific Parameters

No.	Parameter name		Default value (Reference)	Input range	Unit	Remarks
137	System reservation	Common	0			
138	System reservation	Common	0	1 ~ 99999999		
139	System reservation	Common	0	-99999999 ~ 99999999		
140	System reservation	Common	0	-99999999 ~ 99999999		
141	System reservation	Common	0	-99999999 ~ 99999999		
142	System reservation	Common	0	0 ~ 2		
143	System reservation	Common	0	0 ~ 9999		
144	System reservation	Common	0	-99999999 ~ 99999999		
145	System reservation	Common	0	0 ~ 10		
146	System reservation	Common	0	1 ~ 99999		
147	(For extension)	Common	0			
148	(For extension)	Common	0			
149	(For extension)	Common	0			
150	Times to Repeat Home Sensor Detection	Pulse Motor Type	0	0 ~ 4	time	* Equivalent to 1 when set to 0. (Main application Ver. 1.07 or later)
	System reservation	AC Servo Motor Type	0			
151 to 165	(For extension)	Common	0			
166	(For extension)	Common	0			
167	(For extension)	Common	0			
168	(For extension)	Common	0			
169	(For extension)	Common	0			
170	(For extension)	Common	0			
171	System reservation	Common	0	0 ~ 99999999		
172	System reservation	Common	0	-99999999 ~ 99999999		
173	System reservation	Common	0	-99999999 ~ 99999999		
174	System reservation	Common	0	0 ~ 99999999		
175	System reservation	Common	0	0 ~ 99999999		
176	System reservation	Common	0	0 ~ 99999999		
177	System reservation	Common	0	0 ~ 99999999		
178	System reservation	Common	0	0 ~ 99999999		
179	System reservation	Common	0	0 ~ 99999999		
180	System reservation	Common	0	0 ~ 100		
181	System reservation	Common	0	0 ~ 400		
182	(For extension)	Common	0			
183	System reservation	Common	0	0 ~ 99999999		
184	System reservation	Common	0	0 ~ 99999999		
185	System reservation	Common	0	0 ~ 99999999		
186	System reservation	Common	0	0 ~ 99999999		
187	System reservation	Common	0	0 ~ 100		
188 to 190	(For extension)	Common	0			
191	System reservation	Common	0	1 ~ 99999999		
192 to 197	(For extension)	Common	0			
198	System reservation	Common	0	0 ~ 9999		
199	System reservation	Common	0	0 ~ 99999999		
200	System reservation	Common	0	0 ~ 99999999		
201 to 214	(For extension)	Common	0			
215	System reservation	Common	0	0 ~ 9999		
216	(For extension)	Common	0			
217	System reservation	Common	0	0 ~ 100		
218 to 220	(For extension)	Common	0			

Axis-Specific Parameters

No.	Parameter name		Default value (Reference)	Input range	Unit	Remarks
221	Total movement count target value	Common	0	0 ~ 99999999	time	Alert function is invalid when maintenance information alert function setting is 0. 231: “Movement counts target value violation” will be generated if “Total movement counts” in the maintenance information exceeds the setting of this parameter.
222	Total operated distance target value	Common	0	0 ~ 99999999	m	Alert function is invalid when maintenance information alert function setting is 0. 232: “Operated distance target value violation” will be generated if “Total operated distance” in the maintenance information exceeds the setting of this parameter.
223 to 250	(For extension)	Common	0	~		

5.4 Driver Card Parameters

* It is described as “In Common” when the statement of a parameter should be the same for the pulse motor type and AC servo motor type.

No.	Parameter name		Default value (Reference)	Input range	Unit	Remarks
				~		
1	Type (upper) (Manufacturing information)	Common	Space	4 digits'' ~ 'z'		
2	Type (middle) (Manufacturing information)	Common	Space	4 digits'' ~ 'z'		
3	Type (lower) (Manufacturing information)	Common	Space	4 digits'' ~ 'z'		
4	Manufacturing data 4 (Manufacturing information)	Common	Space	4 digits'' ~ 'z'		
5	Manufacturing data 5 (Manufacturing information)	Common	Space	4 digits'' ~ 'z'		
6	Manufacturing data 6 (Manufacturing information)	Common	Space	4 digits'' ~ 'z'		
7	Manufacturing data 7 (Manufacturing information)	Common	Space	4 digits'' ~ 'z'		
8	Board type (Function information)	Common	30	0 ~ 255		
9	Function information 01 (Hard): Encoder support information (upper word)	Common	0000H	0000H ~ FFFFH	Encoder ID bit pattern	
10	Function information 02 (Hard): Encoder support information (lower word)	Common	003H	0000H ~ FFFFH	Encoder ID bit pattern	
11	Function information 03 (Hard): System reservation	Common	0000H	0000H ~ FFFFH		
12	Function information 04 (Hard): System reservation	Common	0000H	0000H ~ FFFFH		
13	Function information 05 (Hard): System reservation	Common	0000H	0000H ~ FFFFH		
14	Function information 06 (Hard): System reservation	Common	0000H	0000H ~ FFFFH		
15	Function information 07 (Soft): Motor support information (upper word)	Common	0000H	0000H ~ FFFFH	Motor ID bit pattern	
16	Function information 08 (Soft): Motor support information (lower word)	Common	003FH	0000H ~ FFFFH	Motor ID bit pattern	
17	Function information 09 (Soft): Encoder support information (upper word)	Common	0000H	0000H ~ FFFFH	Encoder ID bit pattern	
18	Function information 10 (Soft): Encoder support information (lower word)	Common	0003H	0000H ~ FFFFH	Encoder ID bit pattern	
19	Function information 11 (Soft): Software support information word 0	Common	0000H	0000H ~ FFFFH		
20	Function information 12 (Soft): Software version information	Common	0001H	0000H ~ FFFFH		
21	Function information 13 (Soft): System reservation	Common	0000H	0000H ~ FFFFH		
22	Function information 14 (Soft): System log control word	Common	0000H	0000H ~ FFFFH		
23	Configuration information 01: Configured capacity (rated motor output)	Common	0011H	0000H ~ FFFFH	W	

Driver Card Parameters

No.	Parameter name		Default value (Reference)	Input range	Unit	Remarks
24	Configuration information 02: Configured voltage (Motor voltage)	Common	0018H	0000H ~ FFFFH	V	
25	Configuration information 03: Motor/encoder configuration information	Common	1500H	0000H ~ FFFFH	Motor/ encoder ID bit number	
26	Configuration information 04: System reservation	Common	0000H	0000H ~ FFFFH		
27	Configuration information 05: Encoder resolution (upper word)	Common	0000H	0000H ~ FFFFH		
28	Configuration information 06: Encoder resolution (lower word)	Common	0320H	0000H ~ FFFFH		
29	Configuration information 07: Motor/encoder characteristics word	Pulse Motor Type	0004H	0000H ~ FFFFH		Bits 0 to 2: System reservation (Change prohibited) Bit 3: Brake equipment bit (1: Equipped, 0: Not equipped)
		AC Servo Motor Type	0004H	0000H ~ FFFFH		Bit 0: System reservation (Change prohibited) Bit 1: ABS indication bit (1: ABS 0: INC) Bit 2: System reservation (Change prohibited) Bit 3: Brake equipment bit (1: Equipped, 0: Not equipped)
30	Configuration information 08: System reservation		0000H	0000H ~ FFFFH		
31	Configuration information 09: Control characteristics word	Pulse Motor Type	0000H	0000H ~ FFFFH		
		AC Servo Motor Type	1418H	0000H ~ FFFFH		
32	Configuration information 10: Push torque limit at home return	Common	40	0 ~ 100	%	
33	Configuration information 11: Push torque limit at positioning	Common	70	0 ~ 70	%	
34	Configuration information 12: Control characteristic word 2	Pulse Motor Type	B00H	0000H ~ FFFFH		Bits 0 to 7: System reservation Bit 8: Initial moving direction in excitation-phase signal detection operation (0: CW, 1: CCW) Bit 9: Stop mode selection (0: Full servo mode, 1: Complete stop mode) * In the case of coating or other application where operation focus is given to the locus, select “0” (Full servo mode). (In this case, the complete stop function is disabled.) In all other applications, “1” (complete stop mode) is normally selected. Bit 10: Complete stop transition invalid selection at pressing torque limit operation (0: Valid, 1: Invalid) Bit 11: System reservation Bit 12: System reservation
		AC Servo Motor Type	0000H			This parameter in AC servomotor type is invalid.
35	Configuration information 13: System reservation	Common	0H	0000H ~ FFFFH		
36	Configuration information 14: System reservation	Common	0H	0000H ~ FFFFH		
37	Configuration information 15: Current limitation at positioning stop	Common	70	0 ~ 100	%	
38	System reservation	Common	0H	0000H ~ FFFFH		
39	System reservation	Common	0H	0000H ~ FFFFH		
40	System reservation	Common	0H	0000H ~ FFFFH		
41	System reservation	Common	0H	0000H ~ FFFFH		
42	Torque filter constant	Common	0	0 ~ 2500		
43	System reservation	Common	0H	0000H ~ FFFFH		

Driver Card Parameters

No.	Parameter name		Default value (Reference)	Input range	Unit	Remarks
44	Speed loop proportional gain (upper word)	Pulse Motor Type	0H	0000H ~ 0000H		
		AC Servo Motor Type	0H	0000H ~ 0000H		
45	Speed loop proportional gain (lower word)	Pulse Motor Type	12CH	0000H ~ 7530H		
		AC Servo Motor Type	140H	0000H ~ 7530H		
46	Speed loop integral gain (upper word)	Pulse Motor Type	0H	0000H ~ 0004H		
		AC Servo Motor Type	0H	0000H ~ 0004H		
47	Speed loop integral gain (lower word)	Pulse Motor Type	11F9H	0000H ~ FFFFH		
		AC Servo Motor Type	1988H	0000H ~ FFFFH		
48	Excitation-phase fixed mode parameter	Pulse Motor Type	0H	0000H ~ FFFFH		For pulse motor (Motor rated current ratio)
	System reservation	AC Servo Motor Type	0H			
49	Sine wave drive design output multiplying factor	Pulse Motor Type	0	0 ~ 1000	%	For pulse motor
	System reservation	AC Servo Motor Type	0			
50	Drive transition judgment time	Pulse Motor Type	0	0 ~ 2000	0.05ms	For pulse motor
	System reservation	AC Servo Motor Type	0			
51	System reservation	Common	0H	0000H ~ FFFFH		
52	System reservation	Common	0H	0000H ~ FFFFH		
53	System reservation	Common	0H	0000H ~ FFFFH		
54	System reservation	Common	0H	0000H ~ FFFFH		
55	System reservation	Common	0H	0000H ~ FFFFH		
56	System reservation	Common	0H	0000H ~ FFFFH		
57	System reservation	Common	0H	0000H ~ FFFFH		
58	System reservation	Common	0H	0000H ~ FFFFH		
59	System reservation	Common	0H	0000H ~ FFFFH		
60	System reservation	Common	0H	0000H ~ FFFFH		
61	System reservation	Common	0H	0000H ~ FFFFH		
62	System reservation	Common	0H	0000H ~ FFFFH		
63	System reservation	Common	0H	0000H ~ FFFFH		
64	System reservation	Common	0H	0000H ~ FFFFH		
65	System reservation	Common	0H	0000H ~ FFFFH		
66	System reservation	Common	0H	0000H ~ FFFFH		

Driver Card Parameters

No.	Parameter name		Default value (Reference)	Input range	Unit	Remarks
67	System reservation	Common	0H	0000H ~ FFFFH		
68	System reservation	Common	0H	0000H ~ FFFFH		
69	System reservation	Common	0H	0000H ~ FFFFH		
70	System reservation	Common	0H	0000H ~ FFFFH		
71	System reservation	Common	0H	0000H ~ FFFFH		
72	System reservation	Common	0H	0000H ~ FFFFH		
73	System reservation	Common	0H	0000H ~ FFFFH		
74	System reservation	Common	0H	0000H ~ FFFFH		
75	System reservation	Common	0H	0000H ~ FFFFH		
76	System reservation	Common	0H	0000H ~ FFFFH		
77	System reservation	Common	0H	0000H ~ FFFFH		
78	System reservation	Common	0H	0000H ~ FFFFH		
79	System reservation	Common	0H	0000H ~ FFFFH		
80	System reservation	Common	0H	0000H ~ FFFFH		
81	System reservation	Common	0H	0000H ~ FFFFH		
82	System reservation	Common	0H	0000H ~ FFFFH		
83	System reservation	Common	0H	0000H ~ FFFFH		
84	System reservation	Common	0H	0000H ~ FFFFH		
85	System reservation	Common	0H	0000H ~ FFFFH		
86	System reservation	Common	0H	0000H ~ FFFFH		
87	System reservation	Common	0H	0000H ~ FFFFH		
88	System reservation	Common	0H	0000H ~ FFFFH		
89	System reservation	Common	0H	0000H ~ FFFFH		
90	System reservation	Common	0H	0000H ~ FFFFH		
91	System reservation	Common	0H	0000H ~ FFFFH		
92	System reservation	Common	0H	0000H ~ FFFFH		
93	System reservation	Common	0H	0000H ~ FFFFH		
94	System reservation	Common	0H	0000H ~ FFFFH		
95	System reservation	Common	0H	0000H ~ FFFFH		
96	System reservation	Common	0H	0000H ~ FFFFH		
97	System reservation	Common	0H	0000H ~ FFFFH		
98	System reservation (Query information)	Common	0H	0000H ~ FFFFH		
99	System reservation (Query information)	Common	0H	0000H ~ FFFFH		
100	System reservation (Query information)	Common	0H	0000H ~ FFFFH		
101	System reservation (Query information)	Common	0H	0000H ~ FFFFH		
102	System reservation (Query information)	Common	0H	0000H ~ FFFFH		

Driver Card Parameters

No.	Parameter name		Default value (Reference)	Input range	Unit	Remarks
103	System reservation (Query information)	Common	0H	0000H ~ FFFFH		
104	System reservation (Query information)	Common	0H	0000H ~ FFFFH		
105	System reservation (Query information)	Common	0H	0000H ~ FFFFH		
106	System reservation (Query information)	Common	0H	0000H ~ FFFFH		
107	System reservation (Query information)	Common	0H	0000H ~ FFFFH		
108	System reservation (Query information)	Common	0H	0000H ~ FFFFH		
109	System reservation (Query information)	Common	0H	0000H ~ FFFFH		
110	System reservation (Query information)	Common	0H	0000H ~ FFFFH		
111	System reservation (Query information)	Common	0H	0000H ~ FFFFH		
112	System reservation (Query information)	Common	0H	0000H ~ FFFFH		

5.5 Encoder Parameters

* It is described as “In Common” when the statement of a parameter should be the same for the pulse motor type and AC servo motor type.

No	Parameter name		Default value (Reference)	Input range	Unit	Remarks
				~		
1	Type (upper) (Manufacturing information)	Common	Space	4 digits” ~ ’z’		
2	Type (middle) (Manufacturing information)	Common	Space	4 digits” ~ ’z’		
3	Type (lower) (Manufacturing information)	Common	Space	4 digits” ~ ’z’		
4	Manufacturing data 4 (Manufacturing information)	Common	Space	4 digits” ~ ’z’		
5	Manufacturing data 5 (Manufacturing information)	Common	Space	4 digits” ~ ’z’		
6	Manufacturing data 6 (Manufacturing information)	Common	Space	4 digits” ~ ’z’		
7	Manufacturing data 7 (Manufacturing information)	Common	Space	4 digits” ~ ’z’		
8	Board type (Function information)	Common	0	0 ~ 255		
9	Function information 01: Configured capacity (Rated motor output)	Common	0000H	0000H ~ FFFFH	W	
10	Function information 02: Configured voltage (Motor voltage)	Common	0000H	0000H ~ FFFFH	V	
11	Function information 03: Motor/encoder configuration information	Common	0000H	0000H ~ FFFFH	Motor/ encoder ID bit number	
12	Function information 04: Encoder resolution (upper word)	Common	0000H	0000H ~ FFFFH		
13	Function information 05: Encoder resolution (lower word)	Common	0000H	0000H ~ FFFFH		
14	Function information 06: Motor/encoder characteristics word	Common	0000H	0000H ~ FFFFH		
15	Function information 07: Motor/encoder control word 1 (nX-E compatible)	Common	0000H	0000H ~ FFFFH	0.1 K (Kelvin = temperature)	
16	Function information 08: Motor/encoder control word 2 (nX-E compatible)	Common	0000H	0000H ~ FFFFH		
17	Function information 09: Motor/encoder control word 3 (nX-E compatible)	Common	0000H	0000H ~ FFFFH		
18	Function information 10: Motor/encoder control word 4 (nX-E compatible)	Common	0000H	0000H ~ FFFFH		
19	Function information 11 (System reservation)	Common	0000H	0000H ~ FFFFH		
20	Function information 12 (System reservation)	Common	0000H	0000H ~ FFFFH		
21	Function information 13 (System reservation)	Common	0000H	0000H ~ FFFFH		
22	Function information 14 (System reservation)	Common	0000H	0000H ~ FFFFH		
23	Card parameter (By board type)	Common	0000H	0000H ~ FFFFH		
24	Card parameter (By board type)	Common	0000H	0000H ~ FFFFH		
25	Card parameter (By board type)	Common	0000H	0000H ~ FFFFH		
26	Card parameter (By board type)	Common	0000H	0000H ~ FFFFH		

Encoder Parameters

No	Parameter name		Default value (Reference)	Input range	Unit	Remarks
27	Card parameter (By board type)	Common	0000H	0000H ~ FFFFH		
28	Card parameter (By board type)	Common	0000H	0000H ~ FFFFH		
29	Card parameter (By board type)	Common	0000H	0000H ~ FFFFH		
30	Card parameter (By board type)	Common	0000H	0000H ~ FFFFH		

5.6 I/O-Slot Card Parameters

* It is described as “In Common” when the statement of a parameter should be the same for the pulse motor type and AC servomotor type.

No.	Parameter name		Default value (Reference)	Input range	Unit	Remarks
1	Type (upper) (Manufacturing information)	Common	Space	Four-digit ASCII code		
2	Type (middle) (Manufacturing information)	Common	Space	Four-digit ASCII code		
3	Type (lower) (Manufacturing information)	Common	Space	Four-digit ASCII code		
4	Manufacturing data 4 (Manufacturing information)	Common	Space	4 digits ’ ’ ~ ’ z’		
5	Manufacturing data 5 (Manufacturing information)	Common	Space	4 digits ’ ’ ~ ’ z’		
6	Manufacturing data 6 (Manufacturing information)	Common	Space	4 digits ’ ’ ~ ’ z’		
7	Manufacturing data 7 (Manufacturing information)	Common	Space	4 digits ’ ’ ~ ’ z’		
8	Board type (Function information)	Common	0	0 ~ 255		
9	Function information 01 (By board type)	Common	0000H	0000H ~ FFFFH		
10	Function information 02 (By board type)	Common	0003H	0000H ~ FFFFH		
11	Function information 03 (By board type)	Common	0000H	0000H ~ FFFFH		
12	Function information 04 (By board type)	Common	0000H	0000H ~ FFFFH		
13	Function information 05 (By board type)	Common	0000H	0000H ~ FFFFH		
14	Function information 06 (By board type)	Common	0000H	0000H ~ FFFFH		
15	Function information 07 (By board type)	Common	0000H	0000H ~ FFFFH		
16	Function information 08 (By board type)	Common	0000H	0000H ~ FFFFH		
17	Function information 09 (By board type)	Common	0000H	0000H ~ FFFFH		
18	Function information 10 (By board type)	Common	0000H	0000H ~ FFFFH		
19	Function information 11 (By board type)	Common	0000H	0000H ~ FFFFH		
20	Function information 12 (By board type)	Common	0000H	0000H ~ FFFFH		
21	Function information 13 (By board type)	Common	0000H	0000H ~ FFFFH		
22	Function information 14 (By board type)	Common	0000H	0000H ~ FFFFH		
23	Card parameter (By board type)	Common	0000H	0000H ~ FFFFH		
24	Card parameter (By board type)	Common	0000H	0000H ~ FFFFH		
25	Card parameter (By board type)	Common	0000H	0000H ~ FFFFH		
26	Card parameter (By board type)	Common	0000H	0000H ~ FFFFH		
27	Card parameter (By board type)	Common	0000H	0000H ~ FFFFH		
28	Card parameter (By board type)	Common	0000H	0000H ~ FFFFH		
29	Card parameter (By board type)	Common	0000H	0000H ~ FFFFH		
30	Card parameter (By board type)	Common	0000H	0000H ~ FFFFH		
31	Card parameter (By board type)	Common	0000H	0000H ~ FFFFH		

I/O-Slot Card Parameters

No.	Parameter name		Default value (Reference)	Input range	Unit	Remarks
32	Card parameter (By board type)	Common	0000H	0000H ~ FFFFH		
33	Card parameter (By board type)	Common	0000H	0000H ~ FFFFH		
34	Card parameter (By board type)	Common	0000H	0000H ~ FFFFH		
35	Card parameter (By board type)	Common	0000H	0000H ~ FFFFH		
36	Card parameter (By board type)	Common	0000H	0000H ~ FFFFH		
37	Card parameter (By board type)	Common	0000H	0000H ~ FFFFH		
38	Card parameter (By board type)	Common	0000H	0000H ~ FFFFH		
39	Card parameter (By board type)	Common	0000H	0000H ~ FFFFH		
40	Card parameter (By board type)	Common	0000H	0000H ~ FFFFH		
41	Card parameter (By board type)	Common	0000H	0000H ~ FFFFH		
42	Card parameter (By board type)	Common	0000H	0000H ~ FFFFH		
43	Card parameter (By board type)	Common	0000H	0000H ~ FFFFH		
44	Card parameter (By board type)	Common	0000H	0000H ~ FFFFH		
45	Card parameter (By board type)	Common	0000H	0000H ~ FFFFH		
46	Card parameter (By board type)	Common	0000H	0000H ~ FFFFH		
47	Card parameter (By board type)	Common	0000H	0000H ~ FFFFH		
48	Card parameter (By board type)	Common	0000H	0000H ~ FFFFH		
49	Card parameter (By board type)	Common	0000H	0000H ~ FFFFH		
50	Card parameter (By board type)	Common	0000H	0000H ~ FFFFH		
51	Card parameter (By board type)	Common	0000H	0000H ~ FFFFH		
52	Card parameter (By board type)	Common	0000H	0000H ~ FFFFH		
53	Card parameter (By board type)	Common	0000H	0000H ~ FFFFH		
54	Card parameter (By board type)	Common	0000H	0000H ~ FFFFH		
55	Card parameter (By board type)	Common	0000H	0000H ~ FFFFH		
56	Card parameter (By board type)	Common	0000H	0000H ~ FFFFH		
57	Card parameter (By board type)	Common	0000H	0000H ~ FFFFH		
58	Card parameter (By board type)	Common	0000H	0000H ~ FFFFH		
59	Card parameter (By board type)	Common	0000H	0000H ~ FFFFH		
60	Card parameter (By board type)	Common	0000H	0000H ~ FFFFH		
61	Card parameter (By board type)	Common	0000H	0000H ~ FFFFH		
62	Card parameter (By board type)	Common	0000H	0000H ~ FFFFH		
63	Card parameter (By board type)	Common	0000H	0000H ~ FFFFH		
64	Card parameter (By board type)	Common	0000H	0000H ~ FFFFH		
65	Card parameter (By board type)	Common	0000H	0000H ~ FFFFH		
66	Card parameter (By board type)	Common	0000H	0000H ~ FFFFH		
67	Card parameter (By board type)	Common	0000H	0000H ~ FFFFH		

I/O-Slot Card Parameters

No.	Parameter name		Default value (Reference)	Input range	Unit	Remarks
68	Card parameter (By board type)	Common	0000H	0000H ~ FFFFH		
69	Card parameter (By board type)	Common	0000H	0000H ~ FFFFH		
70	Card parameter (By board type)	Common	0000H	0000H ~ FFFFH		
71	Card parameter (By board type)	Common	0000H	0000H ~ FFFFH		
72	Card parameter (By board type)	Common	0000H	0000H ~ FFFFH		
73	Card parameter (By board type)	Common	0000H	0000H ~ FFFFH		
74	Card parameter (By board type)	Common	0000H	0000H ~ FFFFH		
75	Card parameter (By board type)	Common	0000H	0000H ~ FFFFH		
76	Card parameter (By board type)	Common	0000H	0000H ~ FFFFH		
77	Card parameter (By board type)	Common	0000H	0000H ~ FFFFH		
78	Card parameter (By board type)	Common	0000H	0000H ~ FFFFH		
79	Card parameter (By board type)	Common	0000H	0000H ~ FFFFH		
80	Card parameter (By board type)	Common	0000H	0000H ~ FFFFH		
81	Card parameter (By board type)	Common	0000H	0000H ~ FFFFH		
82	Card parameter (By board type)	Common	0000H	0000H ~ FFFFH		
83	Card parameter (By board type)	Common	0000H	0000H ~ FFFFH		
84	Card parameter (By board type)	Common	0000H	0000H ~ FFFFH		
85	Card parameter (By board type)	Common	0000H	0000H ~ FFFFH		
86	Card parameter (By board type)	Common	0000H	0000H ~ FFFFH		
87	Card parameter (By board type)	Common	0000H	0000H ~ FFFFH		
88	Card parameter (By board type)	Common	0000H	0000H ~ FFFFH		
89	Card parameter (By board type)	Common	0000H	0000H ~ FFFFH		
90	Card parameter (By board type)	Common	0000H	0000H ~ FFFFH		
91	Card parameter (By board type)	Common	0000H	0000H ~ FFFFH		
92	Card parameter (By board type)	Common	0000H	0000H ~ FFFFH		
93	Card parameter (By board type)	Common	0000H	0000H ~ FFFFH		
94	Card parameter (By board type)	Common	0000H	0000H ~ FFFFH		
95	Card parameter (By board type)	Common	0000H	0000H ~ FFFFH		
96	Card parameter (By board type)	Common	0000H	0000H ~ FFFFH		
97	Card parameter (By board type)	Common	0000H	0000H ~ FFFFH		
98	Card parameter (By board type)	Common	0000H	0000H ~ FFFFH		
99	Card parameter (By board type)	Common	0000H	0000H ~ FFFFH		
100	Card parameter (By board type)	Common	0000H	0000H ~ FFFFH		
101	Card parameter (By board type)	Common	0000H	0000H ~ FFFFH		
102	Card parameter (By board type)	Common	0000H	0000H ~ FFFFH		
103	Card parameter (By board type)	Common	0000H	0000H ~ FFFFH		

I/O-Slot Card Parameters

No.	Parameter name		Default value (Reference)	Input range	Unit	Remarks
104	Card parameter (By board type)	Common	0000H	0000H ~ FFFFH		
105	Card parameter (By board type)	Common	0000H	0000H ~ FFFFH		
106	Card parameter (By board type)	Common	0000H	0000H ~ FFFFH		
107	Card parameter (By board type)	Common	0000H	0000H ~ FFFFH		
108	Card parameter (By board type)	Common	0000H	0000H ~ FFFFH		
109	Card parameter (By board type)	Common	0000H	0000H ~ FFFFH		
110	Card parameter (By board type)	Common	0000H	0000H ~ FFFFH		
111	Card parameter (By board type)	Common	0000H	0000H ~ FFFFH		
112	Card parameter (By board type)	Common	0000H	0000H ~ FFFFH		

5.7 Other Parameters

* It is described as “In Common” when the statement of a parameter should be the same for the pulse motor type and AC servo motor type.

No.	Parameter name		Default value (Reference)	Input range	Unit	Remarks
1	Auto-start program number	Common	0	0 ~ 255		(Invalid if “0” is set)
2	I/O processing program number at operation/program abort	Common	0	0 ~ 255		The start trigger is determined from the “I/O processing program start type at operation/program abort.” (Note: This program will be started before confirming an abort of other programs.) (Invalid if “0” is set) * If the setting is valid, the number of user program tasks that can be used will decrease by 1.
3	I/O processing program number at all operation pause	Common	0	0 ~ 255		This program will be started when an alloperation-pause command is issued due to an all-operation-pause factor. (Only when a program is running) (Invalid if “0” is set) * If the setting is valid, the number of user program tasks that can be used will decrease by 1.
4	Program abort type at error	Common	0	0 ~ 5		0: Cancel only the program in which an error of operation-cancellation level or higher has generated. (If the error requires the drive source to be cut off, a given servo to be turned OFF, all axis servos to be turned OFF, etc., all programs other than the “I/O processing program at operation/program abort” will be cancelled.) 1: Cancel all programs other than the “I/O processing program at operation/program abort” when an error of operationcancellation level or higher has generated.
5	I/O processing program start type at operation/program abort	Common	0	0 ~ 5		0: When all-operation-cancellation factor has generated (Only when a program is running) 1: When all-operation-cancellation factor has generated (Always) 2: All-operation-cancellation factor + Error of operation-cancellation level or higher (“Other Parameter No. 4 = 0” is considered) (Only when a program is running) 3: All-operation-cancellation factor + Error of operation-cancellation level or higher (“Other Parameter No. 4 = 0” is considered) (Always)
6	PC/TP reconnection delay at software reset	Common	11000	1 ~ 99999	msec	* Effective after the controller, PC software or TP is restarted.
7	(For extension)	Common	0			
8	(For extension)	Common	0			
9	System reservation	Common	0	0 ~ 2		
10	Emergency-stop recovery type	Common	0	0 ~ 4		0: Abort operations/programs 1: Recovery after reset 2: Operation continued (Only during automatic operation. * Operation commands from the PC software/TP will be aborted from the PC software/TP side.) 3: Abort operations/programs (Software reset when the emergency stop is reset. The home-return completion status of incremental-encoder axes will be reset (EG approximation swap). 4: Abort operations/programs (Error reset (Only with an error of operation-cancellation level or lower) and auto-start program start (Only if AUTO mode and I/O Parameter No. 33 = 1 and I/O Parameter No. 44 ≠ 1 and all-operation-cancellation factor is not present) when the emergency stop is reset). There must be a minimum interval of 1 second after an emergency stop is actuated before it is reset. The home-return completion status of incremental-encoder axes will be retained.)
11	Enable switch (Dead man’s switch, enable switch) recovery class	Common	0	0 ~ 2		0: Abort operations/programs 1: Recovery after reset 2: Operation continued (Only during automatic operation*) * Operation commands from the PC/TP will be aborted on the PC/TP side.
12	Automatic operation recognition type	Common	0	0 ~ 3		0: Program is running and all-operation-cancellation factor is not present 1: [Program is running OR in AUTO mode] and all-operation-cancellation factor is not present
13	(For extension)	Common	0			
14	(For extension)	Common	0			
15	(For extension)	Common	0			
16	(For extension)	Common	0			
17	(For extension)	Common	0			
18	(For extension)	Common	0			
19	(For extension)	Common	0			
20	System reservation	Common	0	0 ~ 2		

Other Parameters

No.	Parameter name		Default value (Reference)	Input range	Unit	Remarks
21	Manual operation type	Common	0	0 ~ 5		0: Always enable edit and SIO/PIO start (Initial condition after connection = With safety speed) 1: Select edit and start (with password) (EU, etc.) 2: Always enable edit and SIO/PIO start (Initial condition after connection = Without safety speed (Cancellation)) * Referenced by the PC/TP.
22	Control use region	Common	0	0 ~ 99		0: J, 1: E, 2: EU
23	PSIZ command function type	Common	0	0 ~ 5		0: Maximum position data area number 1: Number of position data use
24	Local variable number for storing SEL communication command return code	Common	99	1 ~ 99, 1001 ~ 1099		
25	(For extension)	Common	0			
26	(For extension)	Common	0			
27	SEL global data retaining setting	Common	0	0H ~ FFFFFFFFH		Bits 0 to 3: Global flag retaining selection (0: Retain, 1: Not to retain (Initialized to 0 at startup)) (Main application part V2.00 or later) Bits 4 to 7: Global integer variables retaining selection (0: Retain, 1: Not to retain (Initialized to 0 at startup)) (Main application part V2.00 or later) Bits 8 to 11: Global real variables retaining selection (0: Retain, 1: Not to retain (Initialized to 0 at startup)) (Main application part V2.00 or later) Bits 12 to 15: Global string variables retaining selection (0: Retain, 1: Not to retain (Initialized to 0 at startup)) (Main application part V2.00 or later)
28	(For extension)	Common	0			
29	(For extension)	Common	0			
30	Option Password 00	Common	0H	0H ~ FFFFFFFFH		* Change is prohibited unless instructed by the manufacturer.
31	Option Password 01	Common	0H	0H ~ FFFFFFFFH		Reserved (Change prohibited) * Change is prohibited unless instructed by the manufacturer.
32	Option Password 02	Common	0H	0H ~ FFFFFFFFH		Reserved (Change prohibited) * Change is prohibited unless instructed by the manufacturer.
33	(For extension)	Common	0H	0H ~ FFFFFFFFH		
34	(For extension)	Common	0H	0H ~ FFFFFFFFH		
35	(For extension)	Common	0H	0H ~ FFFFFFFFH		
36	(For extension)	Common	0H	0H ~ FFFFFFFFH		
37	(For extension)	Common	0H	0H ~ FFFFFFFFH		
38	(For extension)	Common	0H	0H ~ FFFFFFFFH		
39	(System reservation)	Common	0H	0H ~ FFFFFFFFH		
40	System reservation	Common	3H	0H ~ FFFFFFFFH		For adjustment by the manufacture
41	System reservation	Common	E0H	0H ~ FFFFFFFFH		For adjustment by the manufacture
42	System reservation	Common	7H	0H ~ FFFFFFFFH		For adjustment by the manufacture
43	Special monitor type	Common	0H	0H ~ FFFFFFFFH		* Change is prohibited unless instructed by the manufacturer.
44	(For extension)	Common	0H	0H ~ FFFFFFFFH		

No.	Parameter name		Default value (Reference)	Input range	Unit	Remarks
45	Special start condition setting	Common	0H	0H ~ FFFFFFFFH		Bits 0 to 3: Enable start from PC/TP in AUTO mode = Used exclusively by the manufacturer (0: Do not permit, 1: Permit) (Main application version 0.36 or later) Bits 4 to 7: PIO program start (Input port 000) Single start selection (0: Normal, 1: Single start) * When single start is selected, the next PIO program start (input port 000) will not be accepted as long as a program with the same program number as the one started by the last PIO program start (Input port 000) is running. Bits 8 to 11: Permission of auto program start when all-operation-cancellation factor is present (0: Do not permit, 1: Permit) Bits 12 to 15: Permission of ON edge of PIO program start (input port 000) when all-operation-cancellation factor is present (0: Do not permit, 1: Permit) * This parameter specifies an ON edge acceptance condition and if the start condition is not satisfied, “Error No. A1E, start condition nonsatisfaction error” will generate.

Other Parameters

No.	Parameter name		Default value (Reference)	Input range	Unit	Remarks
46	Other setting bit pattern 1	Common	2001H	0H ~ FFFFFFFFH		Bits 0 to 3: System reservation (Change prohibited) Bits 4 to 7: When substituting integer variable in LET / TRAN Command real number, selection of round-off of decimal fraction (0: Not to round off, 1: Round off) Bits 8 to 11: System reservation Bits 12 to 15: When indicating TPCD Command = 1, Selection of process of Sub-routine 1st Step Input Condition Unindicated Command (0: Not executed, 1: Executed, 2: Error) Bits 16 to 19: Selection of CHVL command speed valid period type (0: Valid only for the main packet currently operating, 1: Valid during continuous packet handling) * If 1, the speed specified by the CHVL command is retained during PATH and other continuous movement commands (must be input to continuous program steps). However, the following limitations apply: • The speed specified by the CHVL command is clamped, on the upper limit side, at the actual speed during the command operation before the change. • If the timing at which the CHVL command is executed on a continuous movement command overlaps with the connection of each position movement packet, two-step speed changes may occur until the specified speed is reached. • The connection speed for each position movement packet may increase in proportion to the deceleration. (Example. 9.8 mm/sec at 1.0 G, 4.9 mm/sec at 0.5 G) For items not specified above, refer to the notes provided in the CHVL command section of the operation manual.
47	Other setting bit pattern 2	Common	1H	0H ~ FFFFFFFFH		Bits 0 to 3: Calendar function use selection (0: Not in use, 1: Use, 2: Not in use (Use the elapsed time after the reset)) * Clear all data in error list when making change Bits 4 to 7: 7-segment display factor switchover (0: Valid, 1: Invalid) * Display is switched among Emergency stop / ENB / Cold-start, Operation cancel level error. Bits 8 to 11: Use servo monitor IO monitoring function (0: Not in use, 1: Use) Bits 12 to 15: Classification of seven-segment display for program in execution (0: Displays program number started up at last 1: Displays program number started up at the earliest Bits 16 to 19: PARG acquirement angle coordinate direction select (0: CW 1: CCW) (Main application part V2.00 or later) Bits 20 to 31: For future extension
48	(For extension)	Common	0			
49	(For extension)	Common	0			
50	(For extension)	Common	0			
51	(For extension)	Common	0			
52	(For extension)	Common	0			
53	Fan status monitoring setting 1	Pulse Motor Type	3H	0H ~ FFFFFFFFH		Bit 0 : Monitoring status of Fan 1 (0: Invalid, 1: Valid) Bit 1: Monitoring status of Fan 2 (0: Invalid, 1: Valid) Bits 2 to 31: System reservation
		AC Servo Motor Type	3H	0H ~ FFFFFFFFH		Bit 0 : Monitoring status of Fan 1 (0: Invalid, 1: Valid) Bit 1: Monitoring status of Fan 2 (0: Invalid, 1: Valid) Bit 2: Monitoring status of Fan 3 (0: Invalid, 1: Valid) Bit 3: Monitoring status of Fan 4 (0: Invalid, 1: Valid) Bits 4 to 31: System reservation

Other Parameters

No.	Parameter name		Default value (Reference)	Input range	Unit	Remarks
54	Fan status monitoring setting 2	Common	0H	0H ~ FFFFFFFFH		Bits 0 to 15: System reservation Bits 16 to 19: Fan status monitoring error level (0: Message level, 1: Cold-start level) Bits 20 to 31: System reservation
55	PC/TP data protect setting 1	Common	0H	0H ~ FFFFFFFFH		Bits 0 to 3: Protect type (Program) (0: Read/write, 1: Read only, 2: No read/write) Bits 4 to 7: Protect release method (Program) (0: Special operation) Bits 8 to 11: Protect type (Position) (0: Read/write, 1: Read only, 2: No read/write) Bits 12 to 15: Protect release method (Position) (0: Special operation) Bits 16 to 19: Protect type (Symbol) (0: Read/write, 1: Read only, 2: No read/write) Bits 20 to 23: Protect release method (Symbol) (0: Special operation) Bits 24 to 27: Protect type (Parameter) (0: Read/write, 1: Read only, 2: No read/write) Bits 28 to 31: Protect release method (Parameter) (0: Special operation) * Referenced by the PC/TP
56	PC/TP data protect setting 2	Common	0H	0H ~ FFFFFFFFH		Bits 0 to 3: Protect range maximum number (Program) (1's place, BCD) Bits 4 to 7: Protect range maximum number (Program) (10's place, BCD) Bits 8 to 11: Protect range maximum number (Program) (100's place, BCD) Bits 12 to 15: Protect range minimum number. (Program) (1's place, BCD) Bits 16 to 19: Protect range minimum number. (Program) (10's place, BCD) Bits 20 to 23: Protect range minimum number. (Program) (100's place, BCD) Bits 24 to 31: System reservation * Referenced by the PC/TP
57	PC/TP data protect setting 3	Common	0H	0H ~ FFFFFFFFH		Bits 0 to 3: Protect range maximum number (Position) (10's place, BCD) Bits 4 to 7: Protect range maximum number (Position) (100's place, BCD) Bits 8 to 11: Protect range maximum number (Position) (1000's place, BCD) Bits 12 to 15: Protect range maximum number (Position) (10000's place, BCD) Bits 16 to 19: Protect range minimum number. (Position) (10's place, BCD) Bits 20 to 23: Protect range minimum number. (Position) (100's place, BCD) Bits 24 to 27: Protect range minimum number. (Position) (1000's place, BCD) Bits 28 to 31: Protect range minimum number. (Position) (10000's place, BCD) * The value in the 1's place is considered "0" for both the protect range maximum/minimum numbers. * Referenced by the PC/TP
58	PC/TP data protect setting 4	Common	0H	0H ~ FFFFFFFFH		Bits 0 to 3: Protect type (Tool coordinate offset) (0: Read/write, 1: Read only, 2: No read/write) (Main application part V2.00 or later) Bits 4 to 7: Protect release method (Tool coordinate offset) (0: Special operation) (Main application part V2.00 or later) Bits 8 to 11: Protect type (Tool coordinate offset) (0: Read/write, 1: Read only, 2: No read/write) (Main application part V2.00 or later) Bits 12 to 15: Protect release method (Tool coordinate offset) (0: Special operation) (Main application part V2.00 or later) * Referenced by the PC/TP
59	Monitoring status of fan 3	Common	11H	0H ~ FFFFFFFFH		For adjustment by the manufacturer
60	System reservation	Common	0H	0H ~ FFFFFFFFH		
61 to 200	(For extension)	Common	0			

5.8 Parameters for Linear / Rotation Controls

Shown in the list below are the combinations of parameters for linear and rotation controls:

Each Axis Parameter No.1 Axis operation type	Each Axis Parameter No.67 Short-cut control selection for rotational movement axis	Each Axis Parameter No.67 Short-cut control selection for rotational movement axis	Each Axis Parameter No.67 Short-cut control selection for rotational movement axis	Current Position Expression (Approxima-tely)	Each Axis Parameter No.7 Soft limit＋	Each Axis Parameter No.8 Soft limit-	Input Unit
0 (linear movement axis)	0 (Normal Mode)	Disable	Disable	Counter Range	Enable	Enable	• Distance mm • Speed mm/sec • Acceleration/ Deceleration G
	1 (Infinite stroke mode) * Necessary to consider duty cycle and timeout check			-10000 to 9999.999 (Rotary)	Disable (Note 1)	Disable (Note 1)	
1 (rotation movement axis)	Disable	0 (Normal Mode)	0 (Short-cut control not selected) * Prohibited to select a number other than 0 in Normal Mode	Counter Range	Enable	Enable	· angle mm → deg · Angular velocity mm/sec → deg/sec · Angular acceleration and deceleration G = 9807mm/sec^2 → 9807deg/sec^2 = 9807×2π/360 rad/sec^2 * "deg" shows the angle of a solid of revolution on the tip
		1 (Index Mode)	0 (Short-cut control not selected)	Counter Range	Disable (Fixed at 359.999 inside)	Disable (Fixed at 0 inside)	
			1 (Short-cut control selection)	0 to 359.999 (Rotary)			

(Note 1): "Error No. CBE Target Tracking Data Boundary Violation Error" will be issued if having a positioning command except for 'JxWx' exceeding the coordinate range approximately from -9990 to 9990.
: "Error No. CC5 Positioning Boundary Excess Error" will be issued if executing a positioning command except for 'JxWx' out of the coordinate range approximately from -9990 to 9990.

Chapter 6 Error List

6.1 Error Level Control

Error level	System error assignment source	Error No. (HEX)	Display (7-segment display, etc.)	Error list (Application only)	Error LED output (MAIN only)	Program run (Application only)		Error reset (Application only)	Remarks
						Other parameter No. 4 = 0	Other parameter No. 4 = 1		
Secret level	Main application	800 to 88F		○					Special error level provided for maintenance purposes
	Main core	890 to 8AF							
	PC	8B0 to 8DF							
	TP	8E0 to 8FF							
Message level	Main application		○	△ (Battery and fieldbus errors will be registered in an error list.)				Enabled	Status display, input error, etc.
	Main core	-							
	PC								
	PC (Update tool)								
	TP								
	Main application	200 to 24F							
	Main core	-							
	PC	250 to 29F							
	PC (Update tool)	2A0 to 2CF							
	TP	2D0 to 2FF							
	Main application	900 to 93F							
	Main core	940 to 97F							
	PC	980 to 9AF							
	PC (Update tool)	9B0 to 9BF							
	TP	9C0 to 9FF							
	Main application	A00 toA6F							
	Main core	A70 to A9F							
	PC	AA0 to ACF							
	TP	AD0 to AFF							
Operation-cancellation level	Main application		○	○		The program in which the error generated will be cancelled. (Except for axis errors, a cancellation factor is present only for the moment the error occurs.) * However, in the case of an error requiring servo OFF or all-axis servo OFF, all programs other than the “I/O processing program at operation/program abort” will be cancelled. (X-SEL J/K Main application version 0.17 or later)	All programs other than the “I/O processing program at operation/program abort” will be cancelled. (Except for axis errors, a cancellation factor is present only for the moment the error occurs.)	Enabled	Errors affecting operation. The system will attempt to reset minor errors below this level using an auto-reset function via external active command (SIO/PIO) (application only).
	Main core	-							
	PC								
	PC (Update tool)								
	TP								
	Main application	400 to 4CF							
	Main core	-							
	PC	4D0 to 4DF							
	PC (Update tool)	4E0 to 4EF							
	TP	4F0 to 4FF							

Error level	System error assignment source	Error No. (HEX)	Display (7-segment display, etc.)	Error list (Application only)	Error LED output (MAIN only)	Program run (Application only)		Error reset (Application only)	Remarks
						Other parameter No. 4 = 0	Other parameter No. 4 = 1		
Operation-cancellation level	Main application	B00 to B9F	○	○		The program in which the error generated will be cancelled. (Except for axis errors, a cancellation factor is present only for the moment the error occurs.) * However, in the case of an error requiring servo OFF or all-axis servo OFF, all programs other than the “I/O processing program at operation/program abort” will be cancelled. (X-SEL J/K Main application version 0.17 or later)	All programs other than the “I/O processing program at operation/program abort” will be cancelled. (Except for axis errors, a cancellation factor is present only for the moment the error occurs.)	Enabled	Errors affecting operation. The system will attempt to reset minor errors below this level using an auto-reset function via external active command (SIO/PIO) (application only).
	Main core	BA0 to BBF							
	PC	BC0 to BDF							
	TP	BE0 to BFF							
	Main application	C00 to CCF							
	Main core	CD0 to CDF							
	PC	CE0 to CEF							
	TP	CF0 to CFF							
Cold start level	Main application	500 to 5CF	○	○	○ (Core only)	The program in which the error generated will be cancelled. * However, in the case of an error requiring drive-source cutoff, servo OFF or all-axis servo OFF (initialization error, power error, etc.), all programs other than the “I/O processing program at operation/program abort” will be cancelled.	All programs other than the “I/O processing program at operation/program abort” will be cancelled.	Not enabled.	The controller power must be reconnected (MAIN only). (The CPU and OS will run properly.)
	Main core	-							
	PC								
	PC (Update tool)								
	TP								
	Main application	600 to 6CF							
	Main core	-							
	PC	6D0 to 6DF							
	PC (Update tool)	6E0 to 6EF							
	TP	6F0 to 6FF							
	Main application	D00 to D8F							
	Main core	D90 to DAF							
	PC	DB0 to DCF							
	PC (Update tool)	DD0 to DDF							
	TP	DE0 to DFF							
	Main application	E00 to E8F							
	Main core	E90 to EBF							
	PC	EC0 to EDF							
	TP	EE0 to EFF							

Error level	System error assignment source	Error No. (HEX)	Display (7-segment display, etc.)	Error list (Application only)	Error LED output (MAIN only)	Program run (Application only)		Error reset (Application only)	Remarks
						Other parameter No. 4 = 0	Other parameter No. 4 = 1		
System down level	Main application		○	○	○	All programs will be cancelled.		Not enabled.	The controller power must be reconnected (MAIN only). (The CPU and OS will run properly.)
	Main core	-							
	PC								
	PC (Update tool)								
	TP								
	Main application	FF0 to FBF							
	Main core	FC0 to FCF							
	PC (Update tool)	FD0 to FDF							
	TP	FE0 to FEF							

6.2 Error List (MAIN Application)

(In the panel window, the three digits after “E” indicate an error number.)

Error No.	Error name	Description, action, etc.
205	Update system software version error (IAI protocol)	An update was tried to an old version of system software that has no compatibility. Check such information as the compatibility of the system software and the hardware, and try the steps for updating again from the start.
207	Update file name error (IAI protocol)	The name of the update program file selected in the update mode is invalid. Select the correct file and repeat the update procedure from the beginning.
208	Time data error	[Detail & Cause] An error is occurred on clock data to be indicated in such as communication. [Countermeasure] Check the communication message and so on.
228	Calendar clock lost error (RTC oscillation stop detection)	[Detail & Cause] Clock data is lost due to power voltage drop in calendar IC. [Countermeasure] Establish the clock setting again.
229	RTC device access error	[Detail & Cause] It is a data access error to the RTC device. [Countermeasure] In case the same error occurs even after power reboot, there is a concern of noise disturbance or component malfunction.
22A	RTC device access error	[Detail & Cause] It is a clock data error off the calendar function. It also occurs when the power voltage in calendar IC is dropped. [Countermeasure] Establish the clock setting again. In case the same error occurs even after clock setting is established, there is a concern of noise disturbance or component malfunction.
22D	Error in number of maintenance information change	[Detail & Cause] There is an error in the number of maintenance information change to be indicated in such as communication. [Countermeasure] Check the communication message and so on.
22E	Maintenance information type error	[Detail & Cause] There is an error in the maintenance information type to be indicated in such as communication. [Countermeasure] Check the communication message and so on.

Error No.	Error name	Description, action, etc.
22F	Maintenance information number error	[Detail & Cause] There is an error in the maintenance information number to be indicated in such as communication. [Countermeasure] Check the communication message and so on.
231	Operation times threshold violation	[Detail & Cause] The total times of axis operation has exceeded the times set in Each Axis Parameter No. 221 “Total Operation Times Threshold”. [Countermeasure] Have maintenance conducted on each axis.
232	Operation distance threshold violation	[Detail & Cause] The total distance of axis operation has exceeded the distance set in Each Axis Parameter No. 222 “Total Operation Distance Threshold”. [Countermeasure] Have maintenance conducted on each axis.
233	Fan error	[Detail & Cause] Drop or stop in fan revolution has been detected. [Countermeasure] Contact IAI as there is a risk of generating heat due to the stop of the fan on the controller.
235	Fan revolution drop alarm	[Detail & Cause] Drop in fan revolution has been detected. [Countermeasure] Contact IAI as there is a risk of generating heat due to the stop of the fan on the controller.
236	Position data record format class error	There is an error in the position data record format class.
23C	Coordinate system definition invalid error	[Detail & Cause] An operation related to coordinate system definition was attempted to be conducted while coordinate system definition was invalid. [Countermeasure] Conduct operations related to coordinate system definition while coordinate system definition is valid.
406	Flash busy reset timeout	Error erasing/writing the flash ROM
40D	Vision system response timeout error	Communication response from the vision system cannot be confirmed. Check bits 4-7 of I/O parameter No. 129, I/O parameter Nos. 160 to 164 and also check if the vision system is sending data in response to imaging commands, among others. * Cartesian axis only.
414	Detected-load held-up count over error	The number of work pieces exceeded the capable number to hold up. Make an action to reduce the number of held work pieces. * Cartesian axis only.
415	Unsupported ID code reception error (Tracking vision system I/F data communication)	An unsupported ID code was received from the vision system. Check the data sent. * Cartesian axis only.

Error No.	Error name	Description, action, etc.
416	Received message error (Tracking vision system I/F data communication)	Invalid data was received from the vision system. Check if data of a wrong format has been sent, among other. * Cartesian axis only.
417	Received number of work piece error (Tracking vision system I/F data communication)	The load count received from the vision system exceeds the maximum number of loads allowed per imaging. Increase the interval between loads on the conveyor or take other appropriate action to prevent the maximum limit from being exceeded. * Cartesian axis only.
418	Work part information handling busy error	It is an internal process error in vision system I/F. The process cannot be continued as the work piece information handling process is busy. There is also a concern that Error No. 419 is generated. * Cartesian axis only.
419	Work part information handling timeout error	It is an internal process error in vision system I/F. The work piece information handling process has timed out. * Cartesian axis only.
421	SCARA / linear axis simultaneous indication error	SCARA and linear movement axes were specified simultaneously. SCARA and linear movement axes cannot be specified or operated at the same time. Check the axis pattern, position data, etc. * SCARA only.
424	Size over error of position number data in response message	[Detail & Cause] The expanded point number in the received command is not supported, so a response cannot be sent successfully. [Countermeasure] Check the communication message and so on.
42F	Positioning timeout error when home position determined	Positioning did not finish at home-return operation. It can be concerned that there was an error in servo-motor gain adjustment or interference of the actuator at the home-return operation.
49B	SEL program source symbol management domain sum check error	[Detail & Cause] An error was detected in SEL program data stored in the flash ROM. [Countermeasure] SEL program will be initialized. Contact IAI in case the same error occurs even after flash ROM writing is conducted.
49C	SEL program source symbol management domain ID error	[Detail & Cause] An error was detected in SEL program data stored in the flash ROM. [Countermeasure] SEL program will be initialized. Contact IAI in case the same error occurs even after flash ROM writing is conducted
49D	Symbol definition table management domain sum check error	[Detail & Cause] An error was detected in the symbol definition table data stored in the flash ROM. [Countermeasure] The symbol definition table data will be initialized. Contact IAI in case the same error occurs even after flash ROM writing is conducted

Error No.	Error name	Description, action, etc.
49E	Symbol definition table management domain ID error	[Detail & Cause] An error was detected in the symbol definition table data stored in the flash ROM. [Countermeasure] The symbol definition table data will be initialized. Contact IAI in case the same error occurs even after flash ROM writing is conducted
4A4	Maintenance information data control domain sum check error	[Detail & Cause] An error was detected in maintenance information data stored in the retention memory. This may occur also when the power is accidently turned off during the initialization of the maintenance information. [Countermeasure] The maintenance information data will not be initialized even if an error is detected. To cancel the error, have the data initialized. Contact IAI in case the same error occurs even after initializing.
4A5	Maintenance information data control domain ID error	[Detail & Cause] An error was detected in maintenance information data stored in the retention memory. [Countermeasure] The maintenance information data will not be initialized even if an error is detected. To cancel the error, have the data initialized. Contact IAI in case the same error occurs even after initializing.
4A6	Maintenance information data sum check error	[Detail & Cause] An error was detected in maintenance information data stored in the retention memory. [Countermeasure] The maintenance information data will not be initialized even if an error is detected. To cancel the error, have the data initialized. Contact IAI in case the same error occurs even after initializing.
4A8	Virtual input and output port operation error	[Detail & Cause] The virtual input and output port of input attribute was tried to change. Change cannot be made to the virtual input and output port of input attribute. [Countermeasure] Check on the virtual input and output port that the change was tried on.
56A	CC-Link system domain use error	CC-Link system domain cannot be used as the system input and output port of TT. As a cause, it can be considered the following items are trying to use the CC-Link system domain as the system output. Check such settings as I/O parameters. 1) Input and output function select port number 2) Zone output port number 3) Vision System I/F image-capturing indication physical output port number, etc.
572	Motor power overcurrent error	[Detail & Cause] Overcurrent has occurred due to an error in motor cable area or malfunction on motor drive circuit. [Countermeasure] Replacement of motor cable or PCB is necessary.

Error No.	Error name	Description, action, etc.
5C0	Coordinate system definition setting error	[Detail & Cause] There is an error in coordinate system definition setting. Following factor can be considered. 1) There is an error in setting for All Axes Parameter No. 56 (Indication of invalid axes or indication forbidden axes, duplication in indicated axis numbers, X, Y and Z-axes are not liner axes, R-axis is not rotation axis, etc.) [Countermeasure] Revise the parameter settings related to coordinate system definition.
614	Driver synchronizing communication LRC error	[Detail & Cause] An error was detected in the communication between the driver CPU and main board FPGA. [Countermeasure] Reboot the power supply. Contact IAI in case the same error occurs even after power reboot.
630	Update system code error (Detected by the application)	The update system code is invalid.
631	Update unit code error (Detected by the application)	The update unit code is invalid.
632	Update device number error (Detected by the application)	The update device number is invalid.
635	Deadman/enable switch requiring reset recovery open	Reset the deadman/enable switch, and then reconnect the power.
685	I/O function selection port number error	The I/O port number setting specified for a given I/O function selection is invalid. Check the settings of I/O parameter Nos. 62 to 65, 76, 77, 283 to 330, etc. e.g. • A value out of the range of input and output port numbers is set. • Input and output port number is duplicated.
690	Motor overcurrent error	[Detail & Cause] The output current on power supply circuit rose extremely high. [Countermeasure] It would not ordinary happen. Insulation degradation on the motor coil or malfunction of the controller can be concerned. Contact IAI.
69C	Parameter control domain sum check error	[Detail & Cause] An error was detected in the parameter data stored in the flash ROM. [Countermeasure] The parameter data will be initialized. Contact IAI in case the same error occurs even after flash ROM writing is conducted.
69D	Parameter control domain ID error	[Detail & Cause] An error was detected in the parameter data stored in the flash ROM. [Countermeasure] The parameter data will be initialized. Contact IAI in case the same error occurs even after flash ROM writing is conducted.

Error No.	Error name	Description, action, etc.
69E	Position data control domain sum check error	[Detail & Cause] An error was detected in the position data. Contents in Info.1 in the error list show the data domain the error was detected. Info.1 = 1: Data stored in the flash ROM (from No. 10001) Info.1 = 2: Data stored in the retention memory (from No. 1 to 10000) In this case, the error will also occur when the power is accidently turned off during memory initialization. [Countermeasure] The position data will not be initialized even if an error is detected. To cancel the error, have the data initialized. Also conduct the flash ROM writing if the error was detected in the flash ROM domain. Contact IAI in case the same error occurs even after initializing (flash ROM writing).
69F	Position data control domain ID error	[Detail & Cause] An error was detected in the position data. Contents in Info.1 in the error list show the data domain the error was detected. Info.1 = 1: Data stored in the flash ROM (from No. 10001) Info.1 = 2: Data stored in the retention memory (from No. 1 to 10000) [Countermeasure] The position data will not be initialized even if an error is detected. To cancel the error, have the data initialized. Also conduct the flash ROM writing if the error was detected in the flash ROM domain. Contact IAI in case the same error occurs even after initializing (flash ROM writing).
6BB	Deviation overflow error (when home return is not yet completed)	[Detail & Cause] The command cannot be performed. The electrical angle may be inconsistent. [Countermeasure] Check for operational interference, locking, wiring, encoder, motor, etc.
6BC	Stop deviation overflow error (when home return is not yet completed)	[Detail & Cause] The actuator may have moved while stationary due to an external force or its operation may have been locked during deceleration. This error may also occur when the operation is locked while jogging (due to contact with an obstacle, contact with the mechanical end while jogging before home return, etc.) or as a result of wiring error, encoder failure or motor failure occurring during deceleration. The electrical angle may be inconsistent. [Countermeasure] Check for operational interference, locking, wiring, encoder, motor, etc.

Error No.	Error name	Description, action, etc.
6BD	Position data structure change error	[Detail & Cause] It is necessary to have the position output operation data effective select parameters (Common for All Parameter No. 54 “All Axes Setting Bit Pattern 3” Bit 4 to 7) and the position data construction changed. [Countermeasure] Confirm the position output operation data effective select parameters (Common for All Parameter No. 54 “All Axes Setting Bit Pattern 3” Bit 4 to 7). 1) In case that the position output operation data effective select parameters are not the values that you desire, it is necessary to change the position output operation data effective select parameters, data transfer to controller, write it in a flash ROM, and then reboot the controller. 2) If the position output operation data effective select parameters are what you desire, initialize the position data, write it in a flash ROM, and then reboot the controller.
6BF	Position data sum check error	[Detail & Cause] An error was detected in the position data. Contents in Info.1 in the error list show the data domain the error was detected. Info.1 = 1: Data stored in the flash ROM (from No. 10001) Info.1 = 2: Data stored in the retention memory (from No. 1 to 10000) [Countermeasure] The position data will not be initialized even if an error is detected. To cancel the error, have the data initialized. Also conduct the flash ROM writing if the error was detected in the flash ROM domain. Contact IAI in case the same error occurs even after initializing (flash ROM writing).
6C7	SEL global data control domain sum check error	[Detail & Cause] An error was detected in SEL global data stored in the retention memory. This may occur also when the power is accidently turned off during the initialization of SEL global data. [Countermeasure] SEL global data will not be initialized even if an error is detected. To cancel the error, have the data initialized. Contact IAI in case the same error occurs even after initializing.
6C8	SEL global data control domain ID error	[Detail & Cause] An error was detected in SEL global data stored in the retention memory. [Countermeasure] SEL global data will not be initialized even if an error is detected. To cancel the error, have the data initialized. Contact IAI in case the same error occurs even after initializing.
6C9	SEL global data sum check error	[Detail & Cause] An error was detected in SEL global data stored in the retention memory. [Countermeasure] SEL global data will not be initialized even if an error is detected. To cancel the error, have the data initialized. Contact IAI in case the same error occurs even after initializing.
801	SCIF overrun status (IAI protocol reception)	Communication failure. Check for noise, connected equipment and communication setting.
802	SCIF receive ER status (IAI protocol reception)	Communication failure. Check for noise, shorted/disconnected communication cable, connected equipment and communication setting. This error will also occur when establishing communication with the PC/TP wrongly connected to SIO-CH1 being opened to the user.

Error No.	Error name	Description, action, etc.
803	Receive timeout status (IAI protocol reception)	The transfer interval after the first received byte is too long. Possible causes include disconnected communication cable and error in the connected equipment.
804	SCIF overrun status (SEL reception)	Communication failure. Check for noise, connected equipment and communication setting.
805	SCIF receive ER status (SEL reception)	Communication failure. Check for noise, shorted/disconnected communication cable, connected equipment and communication setting.
806	SCIF receive ER status due to other factor (SEL reception)	Communication failure. Take the same action specified for error No. 804 or 805.
807	Drive-source cutoff relay ER status	The motor-drive power ON status remains ON even when the drive source is cut off. The drive-source cut-off relay contacts may have been melted.
808	Power OFF status during slave parameter write	The power was turned off while writing slave parameters.
809	Power OFF status during data write to flash ROM	The power was turned off while writing data to the flash ROM.
80A	Extension SIO overrun status (at SEL receiving)	[Detail & Cause] The overrun error was detected while receiving extension SIO. [Countermeasure] Contact IAI if this occurs even after rebooting power.
80B	Extension SIO parity ER status (at SEL receiving)	[Detail & Cause] The parity error was detected while receiving extension SIO. [Countermeasure] Check the noise prevention measures and communication settings on both receiving and sending devices.
80C	Extension SIO framing ER status (at SEL receiving)	[Detail & Cause] The framing error was detected while receiving extension SIO. [Countermeasure] Check the noise prevention measures and communication settings on both receiving and sending devices.
80D	Extension SIO other factor receiving ER status (at SEL receiving)	[Detail & Cause] An error other than Error No. 80A, 80B and 80C was detected while receiving extension SIO. [Countermeasure] Contact IAI if this occurs even after rebooting power.
80E	Extension SIO receiving buffer overflow status (at SEL receiving)	[Detail & Cause] The extension SIO receiving buffer has overflown. Excessive amount of data is being received from external devices. [Countermeasure] Check the sent data from connected devices and delimiter setting in SEL program.
80F	Ethernet control status 1	Ethernet control information (For analysis)
810	Ethernet control status 2	Ethernet control information (For analysis)
811	Maintenance information 1	Maintenance information (For analysis)
812	Maintenance information 2	Maintenance information (For analysis)
813	Maintenance information 3	Maintenance information (For analysis)

Error No.	Error name	Description, action, etc.
814	Maintenance information 4	Maintenance information (For analysis)
815	Maintenance information 5	Maintenance information (For analysis)
821	Tracking system adjustment-type specification error	The specified tracking system adjustment type is invalid. Specify only the type allowed. * Cartesian axis only.
824	Controller power-on log	It is the log for time when the controller power is turned on. (not error)
825	Controller software reset log	It is the log for time of controller software reset. (not error)
826	Power-off status during memory initializing	[Detail & Cause] It was detected the power was turned off while in the operation to initialize the memory. As the initializing process was interrupted, there may be a risk the memory data error has been occurred. [Countermeasure] Conduct the memory initialization again.
900	Blank step shortage error	There are not enough blank steps to save step data. Provide enough blank steps needed to save step data.
901	Step number error	The step number is invalid.
902	Symbol-definition table number error	The symbol-definition table number is invalid.
903	Position number error	The position number is invalid.
904	Variable number error	The variable number is invalid.
905	Flag number error	The flag number is invalid.
906	I/O port/flag number error	The I/O port/flag number is invalid.
910	Command error (IAI protocol HT reception)	The command ID is not supported or invalid. (For future expansion)
911	Message conversion error (IAI protocol HT reception)	The transmitted message does not match the message format or contains invalid data. (For future expansion)
912	PC/TP servo-movement command acceptance-enable input OFF error	Any axis movement command issued to the axis specified in I/O parameter No. 78 from the PC/TP will not be accepted while the input port specified in I/O parameter No. 77 is OFF. (Important: The acceptance-enable input port will become invalid once the operation is started.)
930	Coordinate system number error	The coordinate system number is invalid.
931	Coordinate system type error	The coordinate system type is invalid.
932	Coordinate system definition data count-specification error	The specified number of coordinate system definition data is invalid.
933	Axis number error	The axis number is invalid.
935	Positioning operation type error	The positioning operation type is invalid.
936	Simple interference check zone number error	The simple interference check zone number is invalid. * SCARA only.
938	Simple interference check zone data count-specification error	The specified number of simple interference check zone data is invalid. * SCARA only.
939	Detection of entry into simple interference check zone (Message level specification)	Entry into the simple interference check zone was detected. (Message level specification) * SCARA only.

Error No.	Error name	Description, action, etc.
93A	R-axis CP jog prohibition error when out of operation range (When tool XY offset is valid)	Move into the operation range by jogging each axis. * SCARA only.
A04	System mode error at core update	[Detail & Cause] An update command was received when the system was not in the core update mode. [Countermeasure] Establish the setting in the update mode for core part. (For maintenance)
A05	Motorola S record format error	The update program file is invalid. Check the file.
A06	Motorola S checksum error	The update program file is invalid. Check the file.
A07	Motorola S load address error	The update program file is invalid. Check the file.
A08	Motorola S write address over error	The update program file is invalid. Check the file.
A09	Flash-ROM timing limit over error (Write)	Error writing the flash ROM
A0A	Flash-ROM timing limit over error (Erase)	Error erasing the flash ROM
A0B	Flash-ROM verify error	Error erasing/writing the flash ROM
A0C	Flash-ROM ACK timeout	Error erasing/writing the flash ROM
A0D	Head sector number specification error	Error erasing the flash ROM
A0E	Sector count specification error	Error erasing the flash ROM
A0F	Write-destination offset address error (Odd-numbered address)	Error writing the flash ROM
A10	Write-source data buffer address error (Odd-numbered address)	Error writing the flash ROM
A11	Invalid core-code sector block ID error	The core program already written to the flash ROM is invalid.
A12	Core-code sector block ID erase count over	The number of times the flash ROM can be erased was exceeded.
A13	Flash-ROM write request error when erase is incomplete	When updating, a flash-ROM write command was received before a flash-ROM erase command. Check the update program file and perform update again.
A14	Busy-status reset timeout error at EEPROM write	A busy-status reset timeout occurred after executing EEPROM write.
A15	EEPROM write request error due to no-EEPROM in target	An EEPROM write request was received for a driver or other unit with CPU not equipped with EEPROM.
A16	EEPROM read request error due to no-EEPROM in target	An EEPROM read request was received for a driver or other unit with CPU not equipped with EEPROM.
A17	Message checksum error (IAI protocol reception)	The checksum in the received message is invalid.
A18	Message header error (IAI protocol reception)	The header in the received message is invalid. Invalid header position (message is 9 bytes or less) is suspected, among other reasons.
A19	Message station number error (IAI protocol reception)	The station number in the received message is invalid.
A1A	Message ID error (IAI protocol reception)	The ID in the received message is invalid.
A1C	Message conversion error	The transmitted message does not match the message format or contains invalid data. Check the transmitted message.
A1D	Start mode error	A start not permitted in the current mode (MANU/AUTO) was attempted.

Error No.	Error name	Description, action, etc.
A1E	Start condition non-satisfaction error	Start was attempted when the start condition was not satisfied, such as when an all-operation-cancellation factor (see the 7-segment display: Drive-source cutoff, mode switching, error, auto-start switch OFF edge, deadman switch, safety gate, emergency stop, etc.) was present or the flash ROM was being written.
A1F	Axis duplication error (SIO • PIO)	The applicable axis is currently in use.
A20	Servo-control-right acquisition error (SIO • PIO)	The servo control right is not available.
A21	Servo-control-right duplicate-acquisition error (SIO • PIO)	The servo control right has already been acquired.
A22	Servo-control-right non-acquisition error (SIO • PIO)	An attempt to retain the servo control right has failed.
A25	Step count specification error	The specified number of steps is invalid.
A26	Program count specification error	The specified number of programs is invalid.
A27	Program non-registration error	The applicable program is not registered.
A28	Reorganization disable error during program run	A program-area reorganization operation was attempted while a program was running. End all active programs first.
A29	Active-program edit disable error	An edit operation was attempted to a program currently not running. End the applicable program first.
A2A	Program inactive error	The specified program is not running.
A2B	Program-run command refusal error in AUTO mode	Programs cannot be run from the TP/PC software connector in the AUTO mode.
A2C	Program number error	The program number is invalid.
A2D	Inactive program resumption error	A resumption request was received for a program currently not running.
A2E	Inactive program pause error	A pause request was received for a program currently not running.
A2F	Breakpoint error	The step number specified as a breakpoint is invalid.
A30	Breakpoint setting-count specification error	The number of breakpoints to be set exceeds the limit value.
A31	Parameter change value error	The value of parameter changed is invalid.
A32	Parameter type error	The parameter type is invalid.
A33	Parameter number error	The parameter number is invalid.
A34	Card-parameter buffer read error	Error reading the card-parameter buffer
A35	Card-parameter buffer write error	Error writing the card-parameter buffer
A36	Parameter change refusal error during operation	Parameters cannot be changed during operation (Program is running, servo is in use, etc.).
A37	Card manufacturing/function information change refusal error	The card manufacturing/function information cannot be changed.
A38	Parameter change refusal error during servo ON	An attempt was made to change a parameter whose change is not permitted while the servo is ON.
A39	Non-acquired card parameter change error	An attempt was made to change a parameter for a card not recognized at reset.
A3A	Device number error	The device number is invalid.
A3C	Memory initialization type specification error	The specified memory initialization type is invalid.
A3D	Unit type error	The unit type is invalid.

Error No.	Error name	Description, action, etc.
A3E	SEL write data type specification error	The specified SEL write data type is invalid.
A3F	Flash-ROM write refusal error during program run	The flash ROM cannot be written while a program is running.
A40	Data change refusal error during flash ROM write	Data cannot be changed while the flash ROM is being written.
A41	Duplicate flash-ROM write commands refusal error	Another flash-ROM write command was received while the flash ROM was being written.
A42	Direct monitor prohibition error during flash ROM write	Direct monitor is prohibited while the flash ROM is being written.
A43	P0/P3-area direct monitor prohibition error	Direct monitor in the P0/P3 areas is prohibited.
A44	Position-data count specification error	The specified number of position data is invalid.
A45	Symbol-record count specification error	The specified number of symbol records is invalid.
A46	Variable-data count specification error	The specified number of variable data is invalid.
A48	Error-detail query type 1 error	Error-detail query type 1 is invalid.
A49	Error-detail query type 2 error	Error-detail query type 2 is invalid.
A4B	Monitoring-record count specification error	The specified number of records for monitoring data query is invalid.
A4E	Parameter register busy error at issuance of slave command	The driver special command ACK generated a timeout at issuance of a slave command.
A4F	Software reset refusal error during operation	Software reset (SIO) is prohibited during operation (program is running, servo is in use, etc.).
A50	Drive-source recovery request refusal error	The drive-source cutoff factor (error, deadman switch, safety gate, emergency stop, etc.) has not been removed.
A51	Operation-pause reset request refusal error	The all-operation-pause factor (drive-source cutoff, operation-pause signal, deadman switch, safety gate, emergency stop, etc.) has not been removed.
A53	Refusal error due to servo ON	A processing not permitted during servo ON was attempted.
A54	Refusal error due to unsupported function	The function is not supported.
A55	Refusal error due to exclusive manufacturer function	A processing not opened to users other than the manufacturer was attempted.
A56	Refusal error due to invalid data	The data is invalid.
A57	Program start duplication error	An attempt was made to start a program currently running.
A58	BCD error warning	The BCD value being read may be invalid, or the value being written (variable 99) may be a negative value, among other reasons.
A59	IN/OUT command port flag error warning	The number of I/O ports (flags) may have exceeded 32, among other reasons. Check the I/O port (flag) specifications.
A5B	Character-string → value conversion error warning	The specified number of converting characters is invalid or characters that cannot be converted to value are included.
A5C	Copying-character count error warning with SCPY command	The specified number of copying characters is invalid.
A5D	SCIF open error in non-AUTO mode	The channel was opened in a non-AUTO mode. In the MANU mode, the PC/TP connection must be forcibly disconnected before opening the serial channel opened to the user. Exercise caution.
A5E	I/O-port/flag count specification error	The specified number of I/O ports/flags is invalid.
A5F	Fieldbus error (LERROR-ON)	A LERROR-ON was detected.
A60	Fieldbus error (LERROR-BLINK)	A LERROR-BLINK was detected.

Error No.	Error name	Description, action, etc.
A61	Fieldbus error (HERROR-ON)	A HERROR-ON was detected.
A62	Fieldbus error (HERROR-BLINK)	A HERROR-BLINK was detected.
A64	SCIF overrun error (SIO bridge)	Communication failure. Check for noise, connected equipment and communication setting.
A65	SCIF receive error (SIO bridge)	Communication failure. Check for noise, shorted/disconnected communication cable, connected equipment and communication setting.
A66	SCI overrun error (SIO bridge)	Communication failure. Check for noise, circuit failure and slave card.
A67	SCI framing error (SIO bridge)	Communication failure. Check for noise, shorting, circuit failure and slave card.
A68	SCI parity error (SIO bridge)	Communication failure. Check for noise, shorting, circuit failure and slave card.
A69	Data change refusal error during operation	An attempt was made to change data whose change is prohibited during operation (program is running, servo is in use, etc.).
A6A	Software reset refusal error during write	Software reset is prohibited while data is being written to the flash ROM or slave parameters are being written.
A6B	Fieldbus error (FBRS link error)	A FBRS link error was detected.
A6C	PC/TP start command refusal error in AUTO mode	Starting from the PC software/TP connector is prohibited in the AUTO mode.
A6D	P0/P3/FROM-area direct write prohibition error	Direct write to the P0/P3/FROM areas is prohibited.
A6E	Refusal error during write	A processing not permitted while data is being written to the flash ROM or slave parameters are being written was attempted.

Error No.	Error name	Description, action, etc.
B00	SCHA setting error	The setting of SCHA command is invalid.
B01	TPCD setting error	The setting of TPCD command is invalid
B02	SLEN setting error	The setting of SLEN command is invalid.
B03	Home-return method error	The setting of “Axis-specific parameter No. 10, Home-return method” is invalid. (Not incremental encoder AND current position 0 home is specified, etc.)
B04	1-shot-pulse output excessive simultaneous use error	[Detail & Cause] The output timer used in the SEL program has exceeded the upper limit of use. Followings can be concerned as a cause. 1) The number of BTPN and BTPF simultaneous timer operations in one program is above the upper limit (16). 2) The number of simultaneous outputs (including outputs during display and pulse output) in the position output operation feature is above the upper limit (16). [Countermeasure] Refer to the program number, step number, position number and so on that an error was occurred, and revise the SEL program or position data.
B05	Estimate-stroke over error at home return	The operation at home return exceeded the estimate stroke.
B06	Extension SIO used by other task error	[Detail & Cause] A channel already open by another task was attempted to be open again. [Countermeasure] Use in the same task or use another channel.
B07	Extension SIO not open error	[Detail & Cause] Operation was attempted in a channel not open in the task of itself. [Countermeasure] Open the channel to use in its task.
B08	Extension SIO duplicated WRIT execution error	[Detail & Cause] WRIT Command was executed from multiple tasks to the same channel. [Countermeasure] Execute WRIT Command avoiding duplication in time with other tasks.
B09	Extension SIO RS485 WRIT/READ simultaneous execution error	[Detail & Cause] WRIT Command and READ Command were executed at the same time at RS485. [Countermeasure] For RS485, execute WRIT Command and READ Command avoiding duplication in time.
B0A	Extension SIO not assigned channel use error	[Detail & Cause] An operation was attempted in a channel not assigned in normal condition. [Countermeasure] Check in I/O Parameter No. 100, 102, 104, 106 and 225 and the module mounting condition on the indicated slot.
B12	Storage variable number error for SEL command return code	The variable number specified for storing SEL command’s return code is invalid. Check “Other parameter No. 24, Local variable number for storing READ command return code,” etc.
B15	Input-port debug filter type error	The setting of input-port debug filter type is invalid.

Error No.	Error name	Description, action, etc.
B16	SEL operand specification error	The operand specification of SEL command is invalid
B17	Parameter register busy error at issuance of slave command	The driver special command ACK generated a timeout at issuance of a slave command.
B18	Device number error	The device number is invalid.
B19	Unit type error	The unit type is invalid
B1A	ABS reset specification error	There is an inappropriate input found in the indication to have the ABS reset. (For example, simultaneous indication of two axes or more, indication of an axis other than ABS encoder, old version of PC software or teaching pendant, execution in AUTO Mode, etc.)
B1B	Ethernet non-closed socket open error	An attempt was made to open a socket without closing it first.
B1C	Ethernet in-use-by-other-task error	An attempt was made to open a channel already opened by other task.
B1D	Ethernet non-open error	An attempt was made to use a channel not opened by own task.
B1E	Ethernet multiple WRIT execution error	WRIT commands were executed simultaneously in multiple tasks for the same channel, or a WRIT command had failed (due to a communication error, etc.) and then was retried without executing a CLOS command → OPEN command first.
B1F	Ethernet job busy error	An attempt was made to start a new process when the Ethernet mailbox control job was busy.
B20	Ethernet non-initialization device use error	An attempt was made to use the Ethernet system when Ethernet device initialization was not yet complete. Check I/O parameter Nos. 123 to 159, 14, 15, etc., depending on the purpose of use.
B21	Ethernet IP address error	An error will generate under the following conditions during normal use. When IP address (H) (first octet) through IP address (L) (fourth octet) are given as IP_H, IP_MH, IP_ML and IP_L, the error conditions are described as follows: IP_H ≤ 0 or IP_H = 127 or IP_H > 255 or IP_MH < 0 or IP_MH > 255 or IP_ML < 0 or IP_ML > 255 or IP_L ≤ 0 or IP_L ≥ 255 Check I/O parameter Nos. 132 to 135, 149 to 152, and 154 to 157, the IP address of connection destination specified by an IPCN command in an integer variable, or the like.
B22	Ethernet port number error	An error will generate if own port number < 1025, or own port number > 65535, or own port number duplication, or connection-destination port number for client ≤ 0, or connection-destination port number for client > 65535, or connection-destination port number for server < 0, or connection-destination port number for server > 65535 is satisfied. Check I/O parameter Nos. 144 to 148, 159, 153, and 158, the port number of connection destination specified by an IPCN command in an integer variable, or the like.
B25	Driver unsupported function error	It is a function the driver part does not support. Check the driver applicable version.

Error No.	Error name	Description, action, etc.
B26	Ethernet communication mode error	A communication mode error. Followings can be considered as a cause: • A vision system operation command (SLVS) was executed to a channel being used for communication (OPEN, CLOS, READ or WRIT). • A communication command (OPEN, CLOS, READ or WRIT) was executed to a channel being used for vision system I/F function. A communication command (OPEN, CLOS, READ or WRIT) and vision system operation command (such as SLVS) cannot be used at the same time to one channel.
B27	Vision system specification error	The vision system I/F to be used is different from the vision system I/F currently in use. Release the vision system I/F currently in use (SLVS command operation 1 [0])), and then specify the vision system I/F to be used. * Cartesian axis only.
B28	Vision system I/F initialization incomplete error	Initialization of the vision system I/F is not yet complete. Check I/O parameter Nos. 160 to 164,351 to 357, all-axis parameter No. 121 etc. * Cartesian axis only.
B29	Vision system I/F in use by other task	The specified vision system I/F is currently in use by other task. * Cartesian axis only.
B2A	Vision system I/F imaging position problem error	The Z-axis position at calibration differs from that when capturing image. When the camera is fixed on the robot, it is necessary to have the Z-axis position same at calibration and image-capturing. Check the positions at calibration and image-capturing, and also check All Axes Common Parameter No. 130 Bit 0 to 7 “Judgment Distance”. * Cartesian axis only.
B44	Load mass setting error	The load mass exceeds the maximum loading capacity of the robot. Check the set mass. * SCARA only.
B4B	“Load mass change prohibited while servo is in use” error	The load mass currently used by the servo system cannot be changed. * SCARA only.
B4D	Arm system setting error	There is an error in the setting of the arm system. When the target arm system data is set to the position to make SCARA CP operation (such as linear support and arc support operations), the current arm system and the target arm system of position will differ from each other. In such a case, make the current arm system and the target arm system of position the same. * SCARA only.
B4E	Position gain switchover error	The position gain could not get switched. The followings are concerned as the cause; • Position gain switchover was tried on such axis as in operation or in pressing. • Program was terminated during position gain switchover. • The actuator cannot be remained in the positioning band due to the generation of vibration.etc.
B70	Coordinate system definition data sum check error	The coordinate system definition data is destroyed.
B71	Coordinate system number error	The coordinate system number is invalid.
B72	Coordinate system type error	The coordinate system type is invalid.
B73	Coordinate system data change forbidden error during servo use	The coordinate system data the servo is currently using is forbidden to change.

Error No.	Error name	Description, action, etc.
B74	CP operation limit band violation error (PTP, jog available for each axis)	There was an invasion detected in the CP operation limit band. PTP operation and job operation of each axis are available. * SCARA only.
B75	Singularity calculation error	CP calculation cannot be conducted as it is the singularity. Check if there is any problem to the coordinates due to such as the 2nd arm home position. * SCARA only.
B77	Current arm system setting error	The arm system to be set and the 2nd arm actual angle do not match with each other, or coordinates are not defined. * SCARA only.
B78	Current arm system undefined error	Current arm system is not defined yet. * SCARA only.
B7B	Target track error in keep-out area at back	The target position or the track of the movement is in the keep-out area at the back side. * SCARA only.
B7C	Target track error in CP operation limit band (PTP, jog available for each axis)	The target position or the track of the movement is in CP operation limit band. PTP operation and job operation of each axis are available. * SCARA only.
B7D	Physically unfeasible target error	Unrealistic target considering the construction of the lengths of the 1st and 2nd arms was indicated. Check “Each Axis Parameter No. 138 Arm Length” and the target value. * SCARA only.
B7F	Servo use purpose error	The purpose of the servo use is not ordinary.
B80	Indication prohibited axes error	It is an axis forbidden to indicate. Set an axis that is available to indicate.
B81	Each axis PTP multiple axes indication error	Each axis PTP operation on multiple axes was indicated. Each axis PTP operation is available to indicate only one axis. * SCARA only.
B82	Jog multiple axes indication error	Jog and inching operations are indicated on several axes. Jog and inching operations are available only on one axis.
B84	Arm length error	There is an error in the arm length. Check in “Each Axis Parameter No. 138 Arm Length”. * SCARA only.
B85	Operation start position acquirement error in application servo use work area	The operation start position in the application servo use work area cannot be acquired.
B86	SEL PTRQ command preprocessing error	The PTRQ command setting is abnormal. Check the setting for abnormality, such as deviation from the allowable range.
B87	Target tracking in tool datum point keep-out circle error	The target position or the track of the movement is in the tool datum point keep-out circle. * SCARA only.
B88	Logic error in effective target data calculation	Internal logic error has been issued during effective target data calculation.
B89	SCARA CP logic error	Internal logic error was detected during SCARA CP process. * SCARA only.

Error No.	Error name	Description, action, etc.
B8C	Simple interference check zone violation detection (Operation cancel level indication)	There was an invasion detected in the simple interference check zone. (Operation cancel level indication) * SCARA only.
B8F	Positioning time calculation error	Positioning time calculation error was occurred. * SCARA only.
B90	Transmit distance calculation error	Transmit distance calculation error was occurred. * SCARA only.
B91	Main excessive speed demand error	Excessive speed is demanded. It may also occur when passing near the singularity (Arm 1 and Arm 2 perpendicular point) in CP Operation. In CP Operation, avoid passing near the singularity when in programming. It may also be avoided by decreasing the indicated speed. * SCARA only.
B97	Position output operation data indication error	[Detail & Cause] There is an error in an indication of data related to position output operation. This error could occur in such occasion as stated below. 1) An output function code that the controller does not support was indicated. [Countermeasure] Revise the output setting of the position in error.
B98	Communication channel using method inappropriate open error	[Detail & Cause] A communication channel in a different way of use was attempted to be open. [Countermeasure] Check the setting of how to use channels set in I/O Parameter No. 101 to 107 “User Released SIO Channel n Attribute 2 (Extension)”.
C02	Executable program count over error	Execution requests were received for programs exceeding the number that can be executed simultaneously.
C03	Non-registered program specification error	The specified program is not registered.
C04	Program entry point non-detection error	A request was made to execute a program number for which no program steps are registered.
C05	Program first-step BGSR error	The program specified for execution starts with BGSR.
C06	Executable step non-detection error	The program specified for execution does not contain executable program steps.
C07	Subroutine non-definition error	The subroutine specified for call is not defined.
C08	Subroutine duplicate-definition error	The same subroutine number is defined at multiple locations.
C0A	Tag duplicate-definition error	The same tag number is defined at multiple locations.
C0B	Tag non-definition error	The tag specified as the jump destination of a GOTO statement is not defined.
C0C	DW/IF/IS/SL pair-end mismatch error	The branching command syntax is invalid. Correspondence with the last appearing branching command is invalid when EDIF, EDDO or EDSL is used. Check the correspondence between IF/IS command and EDIF, DO command and EDDO or SLCT command and EDSL
C0D	DW/IF/IS/SL no pair-end error	EDIF, EDDO or EDSL is not found. Check the correspondence between IF/IS command and EDIF, DO command and EDDO or SLCT command and EDSL.

Error No.	Error name	Description, action, etc.
C0E	BGSR no pair-end error	There is no EDSR for BGSR, or no BGSR for EDSR. Check the correspondence between BGSR and EDSR.
C0F	DO/IF/IS over-nesting error	The number of nests in a DO or IF/IS command exceeds the limit value. Check for excessive nesting or branching out of or into the syntax using a GOTO command.
C10	SLCT over-nesting error	The number of nests in a SLCT command exceeds the limit value. Check for excessive nesting or branching out of or into the syntax using a GOTO command.
C11	Subroutine over-nesting error	The number of nests in a subroutine exceeds the limit value. Check for excessive nesting or branching out of or into the syntax using a GOTO command.
C12	DO/IF/IS under-nesting error	The EDIF or EDDO position is invalid. Check the correspondence between IF/IS command and EDIF or DO command and EDDO, or branching out of or into the syntax using a GOTO command.
C13	SLCT under-nesting error	The EDSL position is invalid. Check the correspondence between SLCT and EDSR, or branching out of or into the syntax using a GOTO command.
C14	Subroutine under-nesting error	The EDSR position is invalid. Check the correspondence between BGSR and EDSR, or branching out of or into the syntax using a GOTO command.
C15	SLCT next-step command code error	The program step next to SLCT must be WHEQ, WHNE, WHGT, WHGE, WHLT, WHLE, WSEQ, WSNE, OTHE or EDSL.
C16	Create stack failed	Initialization of the input-condition-status storage stuck has failed.
C17	Expansion-condition code error	Input program step error. The expansion condition code is invalid.
C18	Expansion-condition LD simultaneous processing over error	The number of LDs processed simultaneously exceeds the limit value.
C19	Expansion-condition LD shortage error 1	There is not enough LD when expansion condition A or O is used.
C1A	Expansion-condition LD shortage error 2	There is not enough LD when expansion condition AB or OB is used.
C1C	Unused-LD detection error	An attempt was made to execute a command based on multiple LD condition that has been saved, without using it in expansion condition AB or OB.
C1F	Input-condition CND shortage error	The necessary input condition is not found when an expansion condition is used.
C21	Input-condition use error with input-condition prohibited command	Input-condition prohibited commands prohibit the use of input conditions.
C22	Invalid command position error with input-condition prohibited command	A command for which input condition is prohibited cannot be included in an input condition nest.
C23	Invalid operand error	Program step error. The necessary operand data is invalid.
C24	Operand type error	Program step error. The operand data type is invalid.
C25	Actuator control declaration error	The setting of actuator control declaration command is invalid.
C26	Timer setting-range over error	The timer setting is invalid.
C27	Timeout setting-range over error during wait	The timeout setting is invalid.
C28	Tick count setting-range error	The Tick count setting is invalid.
C29	DIV command divisor 0 error	“0” was specified as the divisor in the DIV command.
C2A	SQR command range error	The operand value in the SQR command is invalid. Input a value larger than “0” as data in a SQR command.

Error No.	Error name	Description, action, etc.
C2B	BCD display digit range error	The specified number of BCD display digits is invalid. Specify a value between 1 and 8.
C2C	Program number error	The program number is invalid.
C2D	Step number error	The step number is invalid.
C2E	Blank step shortage error	There are not enough blank steps to save step data. Provide enough blank steps needed to save step data.
C2F	Axis number error	The axis number is invalid.
C30	Axis pattern error	The axis pattern is invalid.
C32	Operating-axis addition error during command execution	An operating axis for position data was added during continuous position movement or push-motion movement calculation.
C33	Base axis number error	The base axis number is invalid.
C34	Zone number error	The zone number is invalid. * Cartesian axis only.
C35	Position number error	The position number is invalid.
C36	I/O port/flag number error	The I/O port/flag number is invalid.
C37	Flag number error	The flag number is invalid.
C38	Tag number error	The tag number is invalid.
C39	Subroutine number error	The subroutine number is invalid.
C3A	User-open communication channel number error	The channel number of the communication channel opened to the user is invalid.
C3B	Parameter number error	The parameter number is invalid.
C3C	Variable number error	The variable number is invalid.
C3D	String number error	The string number is invalid.
C3E	String-variable data count specification error	The specified number of string variables exceeds the area, etc.
C40	String-variable delimiter non-detection error	Delimiter cannot be detected in the string variable.
C41	String-variable copy size over error	The copy size of string variable is too large.
C42	Character count non-detection error during string processing	The character-string length is not defined in string processing. Execute a string processing command after defining the length with a SLEN command.
C43	Character-string length error during string processing	The character-string length used in string processing is invalid. Check the value of character-string length defined by a SLEN command.
C45	Symbol definition table number error	The symbol definition table number is invalid.
C46	Blank area shortage error with source-symbol storage table	There is not enough area to store the source symbols. Check the number of times source symbol can be used.
C47	Symbol search error	Definitions are not found for the symbols used in the program steps.
C48	SIO-message continuous conversion error	The transmitted SIO message does not match the message format or contains invalid data. Check the transmitted message.
C49	SEL-SIO in-use error	The SIO is being used by other interpreter task.
C4A	SCIF unopen error	Serial channel 1 opened to the user is not opened in the target task. Open the channel using an OPEN command first.

Error No.	Error name	Description, action, etc.
C4B	Delimiter non-definition error	An end character is not defined. Set an end character using a SCHA command first.
C4E	SIO1 invalid usage OPEN error	The usage of serial channel opened to the user does not match the parameter. Check “I/O parameter No. 90, Usage of SIO channel opened to user.”
C4F	SEL program/source symbol checksum error	The flash ROM data has been destroyed.
C50	Symbol definition table checksum error	The flash ROM data has been destroyed.
C55	Flash-ROM erase count over error for SEL global data/error lists	The number of time the flash ROM containing SEL global data/error lists can be erased was exceeded.
C56	Timing limit over error (Flash ROM erase)	Error erasing the flash ROM
C57	Flash-ROM verify error (Flash ROM erase)	Error erasing the flash ROM
C58	Flash-ROM ACK timeout error (Flash ROM erase)	Error erasing the flash ROM
C59	Head sector number specification error (Flash ROM erase)	Error erasing the flash ROM
C5A	Sector count specification error (Flash ROM erase)	Error erasing the flash ROM
C5B	Timing limit over error (Flash ROM write)	Error writing the flash ROM
C5C	Flash-ROM verify error (Flash ROM write)	Error writing the flash ROM
C5D	Flash-ROM ACK timeout error (Flash ROM write)	Error writing the flash ROM
C5E	Flash-ROM ACK timeout error (Flash ROM write)	Error writing the flash ROM
C5F	Write-source data buffer address error (Flash ROM write)	Error writing the flash ROM
C61	SEL-data flash-ROM erase count over error	The number of times the flash ROM containing SEL data can be erased was exceeded.
C62	Operation command error at servo OFF	An attempt was made to execute an operation command when the servo was OFF.
C63	Servo operation condition error	The servo is not in an operation-enabled condition.
C64	Invalid servo acceleration/deceleration error	The internal servo acceleration/deceleration is invalid.
C65	Servo ON/OFF logic error	The servo ON/OFF logic between the main and driver is invalid.
C66	Axis duplication error	An attempt was made to acquire the control right to an axis already in use.
C67	Servo-control-right acquisition error	There is no space in the servo user management area.
C68	Servo-control-right duplicate-acquisition error	The servo control right has already been acquired.
C69	Servo-control-right non-acquisition error	A user who doesn’t have the servo control right attempted to retain the control right.
C6A	Push-motion flag logic error	The internal logic for push-motion processing is invalid.
C6B	Deviation overflow error	The command cannot be followed. Check for operation restriction, wiring, encoder, motor, etc.
C6D	Maximum installable axes over error	The specified number of axes exceeded the number of installable axes as a result of axis shift with a base command.
C6E	Servo-OFF axis use error	An attempt was made to use an axis whose servo is OFF.
C6F	Home-return incomplete error	Home return has not completed yet.

Error No.	Error name	Description, action, etc.
C70	ABS Coordinates Undefined Error	[Detail & Cause] The absolute coordinates are not defined. 1) The servo on the pulse motor battery-less ABS axis is not turned on. 2) Operation was started after absolute reset without having the software reset and reboot of the power. 3) Absolute reset has not been conducted. 4) An axis was moved by such as an external force at the startup of the controller. (C6C Error occurred at the same time) 5) Absolute data in the encoder was lost. (An error such as BOF Error occurred at the same time) [Countermeasure] 1) The pulse motor battery-less ABS axis defines the coordinates when the servo gets turned on at the first time. Turn the servo on. 2) Conduct the software reset and reboot the power. 3) Conduct the absolute reset, and then have the software reset and reboot the power. 4) There is a concern that the actuator or robot is moved by an external force such as a reaction force of a stand-alone cable, vibration in the installed place, or interference to peripherals. Remove a cause to move the axis and conduct the software reset or reboot the power. 5) Conduct the absolute reset, and then have the software reset and reboot the power.
C73	Target-locus soft limit over error	The target position or movement locus exceeds a soft limit. * If this error occurred on a SCARA axis, the axis may not have position data. * For coordinate system definition unit axes, there is a concern of an axis that the position data does not exist.
C74	Actual-position soft limit over error	The actual position exceeds a soft limit by the “soft limit/actual position margin” or more.
C75	Motion-data-packet generation logic error	The motion-data-packet generation logic is invalid.
C76	Movement-position count over error (Old: Movement-point count over error)	Too many packets are generated simultaneously.
C77	Handling-packet overflow error	The servo handling packets overflowed.
C78	Motion-data-packet overflow error	The servo motion data packets overflowed.
C79	Pole sense operation error	Operation is disabled in the pole sense mode.
C7A	Servo unsupported function error	An attempt was made to use an unsupported function.
C7B	Odd-pulse slide error	Internal servo calculation error
C7C	Odd-pulse processing logic error	Internal servo calculation error
C7D	Packet pulse shortage error	Internal servo calculation error
C7E	Quadratic equation solution error	An error was detected while calculating a quadratic equation solution.
C7F	No valid specified axis error	No valid axes are specified.
C80	Servo-packet calculation logic error	Internal servo calculation error
C81	Operation-amount logic during servo ON	Servo processing logic error
C82	Servo direct command type error	Servo processing logic error
C83	Servo calculation method type error	The servo calculation method type is invalid.

Error No.	Error name	Description, action, etc.
C84	In-use axis servo OFF error	The servo of an axis currently in use (being processed) was turned off.
C85	Non-installed driver error	Driver is not installed for the applicable axis.
C86	Driver servo ready OFF error	The ready signal for the driver of the applicable axis is OFF.
C87	SEL unsupported function error	An attempt was made to use a function not supported by SEL.
C88	Speed specification error	The specified speed is invalid.
C89	Acceleration/deceleration specification error	The specified acceleration/deceleration is invalid.
C8B	Circle/arc calculation logic error	The arc calculation logic is invalid.
C8D	Circle/arc calculation error	Position data that cannot be used in arc movement was specified. Check the position data.
C8E	Position deletion error during command execution	The final position data was deleted while continuous position movement was being calculated.
C8F	Axis operation type error	The axis operation type is invalid. Check “Axis-specific parameter No. 1, Axis operation type” and perform operation appropriate for the operation type specified.
C90	Spline calculation logic error	The spline processing logic is invalid.
C91	Push-motion axis multiple specification error	Two or more push-motion axes were specified.
C92	Push-motion approach distance/speed specification error	The specified push-motion approach distance/speed is invalid.
C93	System output operation error	The user attempted a system output operation (through the port specified by I/O parameter for output function selection or the zone output port specified by axis-specific parameter).
C94	PIO program number error	The PIO-specified program number is invalid.
C95	AUTO program number error	The setting of “Other parameter No. 1, Auto-start program number” is invalid.
C97	Program number error for I/O processing program at operation/program abort	The setting of “Other parameter No. 2, I/O processing program number at operation/program abort” is invalid.
C98	Program number error for I/O processing program at operation pause	The setting of “Other parameter No. 3, I/O processing program number at all operation pause” is invalid.
C9D	Card parameter write error	Error writing card parameters
C9E	Servo calculation overflow error	Internal servo calculation error
CA3	Slave setting data out-of-range error	The data set to the slave is outside the allowable range.
CA4	Slave error response	An error response was returned from the slave.
CA5	Stop deviation overflow error	Movement may have occurred during stopping due to external force or operation may have been restricted during deceleration. This error may also generate when jog operation is restricted (due to contact with an obstacle, contact with a mechanical end before home return, etc.) or when wiring error, faulty encoder or faulty motor is detected during deceleration.
CA6	Palletizing number error	The specified palletizing number is invalid.
CA7	Setting error of even-numbered row count for palletizing zigzag	The set even-numbered row count for palletizing zigzag is invalid.
CA8	Setting error of palletizing pitches	The set palletizing pitches are abnormal.
CA9	Setting error of placement points in palletizing-axis directions	The set X/Y-axis direction counts for palletizing are invalid.

Error No.	Error name	Description, action, etc.
CAA	Palletizing PASE/PAPS non-declaration error	Neither PASE or PAPS palletizing-setting command is set. Set either command.
CAB	Palletizing position number error	The specified palletizing position number is invalid.
CAC	Palletizing position number setting over	The specified palletizing position number exceeds the position number range calculated for the current palletizing setting.
CAD	Palletizing PX/PY/PZ-axis duplication error	Any two of the specified PX, PY and PZ-axes for palletizing are the same axis.
CAE	Insufficient valid axes for palletizing 3-point teaching position data	The number of valid axes is insufficient in the position data for palletizing 3-point teaching. Axes to comprise the palletizing PX/PY planes cannot be specified.
CAF	Excessive valid axes for palletizing 3-point teaching position data	The number of valid axes is excessive in the position data for palletizing 3-point teaching. Axes to comprise the palletizing PX/PY planes cannot be specified.
CB0	Mismatched valid axes for palletizing 3-point teaching position data	The valid axis patterns do not match in the position data for palletizing 3-point teaching.
CB1	Offset setting error at palletizing 3-point teaching	Zigzag offset (not zero) cannot be set in palletizing 3-point teaching, if the reference point is the same as the end point of the PX-axis.
CB2	BGPA/EDPA pair-end mismatch error	The BGPA/EDPA syntax is invalid. EDPA was declared before BGPA, or another BGPA was declared after BGPA without first declaring EDPA.
CB4	Arch-motion Z-axis non-declaration error	Z-axis has not been declared by PCHZ or ACHZ.
CB5	BGPA non-declaration error during palletizing setting	Palletizing setting cannot be performed without first declaring BGPA. Declare BGPA.
CB6	Palletizing point error	The palletizing points are invalid (non-Z-axis components are absent, etc.).
CB7	Arch-trigger non-declaration error	Declare arch triggers using PTRG or ATRG.
CB8	No 3-point teaching setting error at palletizing angle acquisition	The palletizing angle cannot be acquired until setting by palletizing 3-point teaching is complete.
CB9	PX/PY-axis indeterminable error at palletizing angle acquisition	Angle cannot be calculated because there are too many valid axes in the 3-point teaching data and thus PX/PY-axes cannot be specified.
CBA	Reference-axis/PY/PY-axis mismatch error at palletizing angle acquisition	Angle cannot be calculated because the reference axis for angle calculation is neither of the axes comprising the PX/PY-axes as set by 3-point teaching.
CBB	Reference-point/PX-axis end-point duplication error at palletizing angle acquisition	Angle cannot be calculated because the reference point of 3-point teaching is the same as the PX-axis end-point data other than the PZ-axis component and thus arc tangent cannot be calculated.
CBC	Palletizing motion calculation error	Trapezoid control calculation error for palletizing motion
CBD	MOD command divisor 0 error	“0” was specified as the divisor in the MOD command.
CBE	Target-locus boundary over error	The target position or movement locus exceeded the positioning boundary in the infinite-stroke mode. * Cartesian axis only.
CBF	Positioning distance overflow error	The positioning distance is too large.
CC0	Axis mode error	The axis mode is invalid.
CC1	Speed change condition error	An attempt was made to change the speed of an axis whose speed cannot be changed (axis operating in S-motion, etc.).

Error No.	Error name	Description, action, etc.
CC2	Driver parameter list number error	The driver parameter list number is invalid.
CC3	Angle error	The angle is invalid.
CC4	SEL data error	The SEL data is invalid.
CC5	Positioning boundary pull-out error	An attempt was made to execute a command not permitted outside the positioning boundary
CC6	Driver error primary detection	A driver error was found by primary detection.
CC7	Palletizing movement PZ-axis pattern non-detection error	PZ-axis component is not found in the axis pattern during palletizing movement.
CC8	Arch top Z-axis pattern non-detection error	Z-axis component relating to the highest point of arch motion is not found in the axis pattern during arch motion operation.
CC9	Arch trigger Z-axis pattern non-detection error	Z-axis component relating to arch motion is not found in the axis pattern of the arch-trigger declaration point data.
CCA	Arch top/end-point reversing error	The coordinates of highest point and end point are reversed during arch motion operation.
CCB	Arch start-point/trigger reversing error	The coordinates of start point and start-point arch trigger are reversed during arch motion operation.
CCC	Arch end-point/trigger reversing error	The coordinates of end point and end-point arch trigger are reversed during arch motion operation.
CCD	Drive-source cutoff axis use error	An attempt was made to use an axis whose drive source is cut off.
CCE	Error axis use error	An attempt was made to use an axis currently generating an error.
CCF	Palletizing reference-point/valid-axis mismatch error	The PX/PY(/PZ)-axes set by PASE/PCHZ are not valid in the axis pattern of the reference-point data set by PAST.
D07	Driver logic error	The encoder is faulty or failure occurred in the encoder communication.
D09	Driver overspeed error	The motor speed exceeded the upper limit.
D0A	Driver overload error	The power input to the motor exceeded the upper limit.
D0B	Driver EEPROM data error	Failure during write or EEPROM failure
D0E	Failure during write or EEPROM failure	An error occurred in the axis sensor.
D0F	Power stage temperature error	The power stage board exceeded the upper temperature limit.
D10	IPM error	A failure occurred in the motor drive circuit.
D11	Driver abnormal interruption error	The driver CPU board is in a condition where it cannot operate normally.
D12	Encoder disconnection error	The encoder cable is disconnected.
D13	FPGA watchdog timer error	Failure in the interface with the main CPU
D14	Current loop underrun error	Failure in the interface with the main CPU
D15	Driver-CPU down status error	An error occurred in the driver CPU board.
D17	Main-CPU alarm status error	Failure in the interface with the main CPU
D18	Speed loop underrun error	Failure in the interface with the main CPU
D1A	Driver command error	An error occurred in the CPU bus command.
D1B	Serial bus receive error	Failure in the interface with the main CPU
D25	Encoder configuration mismatch error	The encoder configuration information is outside the function information range.

Error No.	Error name	Description, action, etc.
D26	Motor configuration mismatch error	The motor configuration information is outside the function information range.
D29	Excitation detection error	An error was detected during excitation communication.
D2A	Driver control power overvoltage error	An overvoltage error was detected in the driver control power.
D2B	Driver control power voltage drop error	A voltage drop was detected in the driver control power.
D2C	Drive-power overvoltage error	An overvoltage error was detected in the motor drive power.
D2D	Drive-power voltage drop error	A voltage drop was detected in the motor drive power.
D2E	Synchronous communication error	A communication failure occurred between the driver board and FPGA (main).
D2F	Driver non-volatile memory error	[Detail & Cause] Error data was detected in the non-volatile memory check during the driver CPU startup. There is a concern of the driver CPU non-volatile memory. [Countermeasure] Contact IAI in case the same error occurs even after power reboot.
D40	Coordinate system data control domain sum check error	The coordinate system data is destroyed. Initialize the coordinate system data.
D41	Coordinate system data control domain ID error	The coordinate system data is destroyed. Initialize the coordinate system data.
D42	Coordinate system data Sum check error	The coordinate system data is destroyed. Initialize the coordinate system data.
D43	Fan error	[Detail & Cause] Drop or stop in fan revolution has been detected. [Countermeasure] Contact IAI as there is a risk of generating heat due to the stop of the fan on the controller.
D46	SCI sending check timeout error	[Detail & Cause] Completion of sending could not be confirmed in the controller internal communication process. [Countermeasure] Repair of the main CPU mounting board.
D4A	IAI protocol logic error	[Detail & Cause] A logic error in a process related to IAI protocol was detected. [Countermeasure] Please contact IAI.
D50	Fieldbus error (FBMIRQ timeout)	A FBMIRQ timeout was detected. Check the status of the monitor LED on the front face of the board by referring to the operation manual for your field network.
D51	Fieldbus error (FBMIRQ reset)	A FBMIRQ reset error was detected. Check the status of the monitor LED on the front face of the board by referring to the operation manual for your field network.
D52	Fieldbus error (FBMBSY)	A FBMBSY was detected. Check the status of the monitor LED on the front face of the board by referring to the operation manual for your field network.
D53	Fieldbus error (BSYERR)	A BSYERR was detected. Check the status of the monitor LED on the front face of the board by referring to the operation manual for your field network.

Error No.	Error name	Description, action, etc.
D54	Window lock error (LERR)	A LERR was detected. Check the status of the monitor LED on the front face of the board by referring to the operation manual for your field network.
D55	Fieldbus error (Min busy)	A Min busy error was detected. Check the status of the monitor LED on the front face of the board by referring to the operation manual for your field network.
D56	Fieldbus error (MinACK timeout)	A Min ACK timeout was detected. Check the status of the monitor LED on the front face of the board by referring to the operation manual for your field network.
D57	Fieldbus error (MoutSTB timeout)	A Mout STB timeout was detected Check the status of the monitor LED on the front face of the board by referring to the operation manual for your field network.
D58	Fieldbus error (INIT timeout)	An INIT timeout was detected. Check the status of the monitor LED on the front face of the board by referring to the operation manual for your field network.
D59	Fieldbus error (DPRAM write/read)	A DPRAM write/read error was detected. Check the status of the monitor LED on the front face of the board by referring to the operation manual for your field network.
D5A	Fieldbus error (TOGGLE timeout)	A TOGGLE timeout was detected. Check the status of the monitor LED on the front face of the board by referring to the operation manual for your field network.
D5B	Fieldbus error (Access-privilege retry over)	An access-privilege retry over error was detected. Check the status of the monitor LED on the front face of the board by referring to the operation manual for your field network.
D5C	Fieldbus error (Access-privilege open error)	An access-privilege open error was detected. Check the status of the monitor LED on the front face of the board by referring to the operation manual for your field network.
D5D	Fieldbus error (FBRS link error)	A FBRS link error was detected. Check the status of the monitor LED on the front face of the board by referring to the operation manual for your field network.
D5E	Fieldbus error (Mailbox response)	A mailbox response error was detected. Check the status of the monitor LED on the front face of the board by referring to the operation manual for your field network.
D5F	Network I/F module class unmatched error	The network I/F module class in I/O Parameter No. 225 and the actual mounted network module class do not match with each other. →Check on such settings as the combination of the setting in I/O Parameter No. 225 and the network module actually mounted.

Error No.	Error name	Description, action, etc.
D64	Extension SIO assignment error	[Detail & Cause] There is an error in the user released SIO channel number assignment setting for the extension SIO. [Countermeasure] Check if it is out of input range, duplication in assignment or difference in actual mount in the settings of “Channel Assignment Number on Board” and “Extension SIO Slot Assignment Number” (I/O Parameter No. 100, 102, 104 and 106) in the user released SIO channel numbers displayed in the error detail information Info. 1. Also, confirm that “I/O Module Classification” (I/O Parameter No. 225) is set to the extension module indication.
D67	Motor/encoder configuration information mismatch error	Driver parameter No. 25 “Motor/encoder configuration information” (motor identification number, encoder identification number) does not match encoder parameter No. 11 “Motor/encoder configuration information” (motor identification number, encoder identification number). Check the parameter values, connection of the encoder cable, etc.
D69	External terminal block overcurrent or power-supply error	Overcurrent or power-supply error in the external terminal block
D6A	Hardware unsupported function error	An attempt was made to use a function not supported by the hardware.
D6C	Actual-position soft limit over error	The actual position exceeded a soft limit by the “soft limit/actual position margin” or more.
D6D	Logic error	A logic error occurred.
D6E	Motor drive-source OFF error (MPONSTR-OFF)	An OFF status of the drive source (MPONSTR-OFF) was detected in a non-shutdown (SHDWNSTR-OFF) state.
D6F	Optional password error	The optional function specified for use requires an optional password. Check other parameter Nos. 30 to 32, etc., depending on the function to be used.
D70	Option use permission error	Check, among others, if an option is specified with a system program that does not permit use of options.
D75	Fieldbus parameter error	There is an error in the fieldbus parameter. Check in IO Parameter No 226 to 227, 237 to 238 and 132 to 135. Followings can be considered as a cause: • A node address out of the specified range was identified. • A baud rate out of the specified range was identified. • Self IP address was set in the system reservation.etc.
D76	Fieldbus module unmounted error	Fieldbus module is not mounted.
D77	Fieldbus error (exception)	Exception error was detected. Refer to the instruction manual of the field network board, and check the LED status for the fieldbus monitoring.
D80	SCARA unsupported function error	An attempt was made to use a function not supported by SCARA. * SCARA only.
D81	Parameter error during calculation of valid target data	An invalid parameter value was detected during calculation of valid target data. Check axis-specific parameter Nos. 7, 8, 138, etc.

Error No.	Error name	Description, action, etc.
D82	Simple interference check zone output-number specification error	A value other than an output port/global flag number (0 is allowed) may have been input, or the specified number may be already used as a system output number via the I/O parameter for output function selection. * SCARA only.
D83	Simple interference check zone number error	The simple interference check zone number is invalid. * SCARA only.
D8A	Optimal acceleration/deceleration, Horizontal move optimization function based on Z position internal parameter error	The value set in the internal parameter for optimal acceleration/deceleration function or Horizontal move optimization function based on Z position for SCARA is abnormal. The optimal acceleration/deceleration function or Horizontal move optimization function based on Z position for SCARA cannot be used. * SCARA only.
D8C	Vision system I/F parameter error	There is an error in the parameter settings. I Check in I/O Parameter No. 160 to 164 and 351 to 357 and All Axes Parameter No. 121. e.g.) • There is an error in vision system I/F connected IP address or port number. • Error in vision system I/F communication device type • Error in vision system I/F initializing complete status physical input port number • Error in vision system I/F communication format type • Error in vision system I/F coordinates definition etc.
E01	DMA address error	DMA transfer error
E02	SCIF send-buffer overflow error	The SCIF send buffer overflowed.
E03	SCI send-buffer overflow error	The SCI send buffer overflowed.
E04	SCIF receive-buffer overflow error	The SCIF receive buffer overflowed. Excessive data was received from outside.
E05	SCI receive-buffer overflow error	The SCI receive buffer overflowed. Excessive data was received from the slave.
E06	Receive timeout error (Slave communication)	Response from the slave cannot be recognized.
E07	SCI overrun error (Slave communication)	Communication failure. Check for noise, circuit failure and slave card.
E08	SCI framing error (Slave communication)	Communication failure. Check for noise, shorting, circuit failure and slave card.
E09	SCI parity error (Slave communication)	Communication failure. Check for noise, shorting, circuit failure and slave card.
E0A	SCI CRC error (Slave communication)	The CRC in the message is invalid.
E10	SCIF communication mode error	The communication mode is invalid.
E11	SCI communication mode error	The communication mode is invalid.
E12	SIO-bridge SCIF send-queue overflow error	The send queue overflowed
E13	SIO-bridge SCI send-queue overflow error	The send queue overflowed
E14	SCI receive-data-register full wait timeout error	Communication failure. Check for noise, shorting, circuit failure and slave card.
E15	SCI overrun error	Communication failure. Check for noise, shorting, circuit failure and slave card.
E16	Program end confirmation timeout error	The program cannot be ended.
E17	I/O-processing-program start logic error	The I/O-processing-program start logic is invalid.
E18	Task ID error	The task ID is invalid.
E19	WAIT factor error	The WAIT factor is invalid.

Error No.	Error name	Description, action, etc.
E1A	WAIT logic error	The WAIT logic is invalid.
E1B	Position-data valid address error	Position-data valid address is not set.
E1C	Source data error	The source data is invalid.
E1D	Unaffected output number error	The unaffected output number is invalid. A value other than an output port number (“0” is acceptable) may be input in I/O parameter Nos. 70 to 73.
E1E	Zone parameter error	A value other than an output port/global flag number (“0” is acceptable) or duplicate numbers may be input in axis-specific parameter Nos. 88, 91, 94 and 97, or the output number specified as system output in the I/O parameter for output function selection may be duplicated, among other reasons. * Cartesian axis only.
E1F	I/O assignment parameter error	A value other than an I/O port number (“-1” is acceptable) or other than an I/O head port number + [multiple of 8] may be input in I/O parameter Nos. 2 to 9, or a value other than a [multiple of 8] may be input in I/O parameter Nos. 14 to 17.
E20	I/O assignment duplication error	I/O assignments are duplicated. Check I/O parameter Nos. 2 to 9 and 14 to 17 and the I/O slot card type (number of I/Os), etc.
E21	I/O assignment count over error	The I/O assignments exceed the specified range. Check I/O parameter Nos. 2 to 9 and 14 to 17 and the I/O slot card type (number of I/Os).
E22	Header error (Slave communication)	The header in the message received from the slave card is invalid.
E23	Card ID error (Slave communication)	The card ID in the message received from the slave card is invalid.
E24	Response type error (Slave communication)	The response type in the message received from the slave card is invalid.
E25	Command type error (Slave communication)	The command type of the transmitting command is invalid.
E26	Target type error	The target type is invalid.
E27	No target error	Target (Driver card, I/O card, encoder or other slave card) is not installed.
E29	EEPROM error (EWEN/EWDS not permitted)	EEPROM access error (When writing)
E2A	Read compare mismatch error during EEPROM write	EEPROM access error (When writing)
E2B	Abnormal response error when sending EEPROM information acquisition command	An abnormal response was received when a slave-EEPROM information acquisition command was sent.
E2C	Maximum receive size over error when sending EEPROM information acquisition command	The maximum receive size exceeds the limit value when a slave-EEPROM information acquisition command is sent.
E2D	Receive-data checksum error when sending EEPROM information acquisition command	The checksum of receive data is invalid when a slave-EEPROM information acquisition command is sent.
E2E	No required power stage error	The required power stage is not installed for the valid axes.
E2F	No required regenerative resistance error	The required regenerative resistance is not installed for the valid axes.
E30	No required motor-drive power error	The required motor-drive power is not installed for the valid axes.
E31	No standard I/O slot error	Standard I/O unit is not installed.
E32	No control power error	Control power unit is not installed.
E33	Slave response logic error	The slave response logic is invalid.
E34	Slave block number out of range	The slave block number is out of range.

Error No.	Error name	Description, action, etc.
E35	Slave EEPROM sum check error	It is the sum check error of slave EEPROM.
E37	Slave data setting prohibited	Setting of slave data is prohibited.
E38	Faulty slave EEPROM	The slave EEPROM is faulty.
E3C	Undefined slave-command error code detected	An undefined slave-command error code was detected.
E3D	SEL program/position/parameter flash ROM status error	Data is not written to the flash ROM correctly or written in an old, incompatible application version.
E3E	Parameter checksum error	The flash ROM data has been destroyed.
E3F	Gain parameter error	The setting of “Axis-specific parameter No. 60, Position gain,” etc., is invalid.
E40	Rotational-movement axis parameter error	Check axis-specific parameter Nos. 67, 66, 38, 37, 1, etc.
E41	Servo-motion data packet shortage error	There are not enough servo-motion data packets.
E42	Servo job error	The servo job is invalid.
E45	Servo undefined command detection error	An undefined command was detected during servo processing.
E50	Driver special command ACK-timeout error	ACK cannot be detected for the driver special command.
E51	Drive unit error (DRVESR)	Error notification from the driver
E52	Encoder error (DRVESR)	Error notification from the driver
E53	Driver CPU error (DRVESR)	Error notification from the driver
E54	Servo control error (DRVESR)	Error notification from the driver
E55	Command error (DRVESR)	Error notification from the driver
E56	Motor temperature error (DRVESR)	Error notification from the driver
E58	Servo ON/OFF timeout error	Servo ON/OFF cannot be confirmed.
E59	Brake ON/OFF timeout error	Brake ON/OFF cannot be confirmed.
E5A	Pole sense non-detection error	Motor magnetic pole cannot be detected.
E5B	Detection OFF error upon pole sense completion	The motor-magnetic-pole detection status bit (Psenex) is turned OFF after completion of pole sense.
E5C	Hold-at-stop servo job error	The servo job is invalid.
E5D	Servo packet error	The servo packets are invalid.
E5E	Servo-control-right management array number error	The servo-control-right management array number is invalid.
E5F	Length conversion parameter error	Check axis-specific parameter Nos. 47, 50, 51, 42, 1, etc.
E60	Slave maximum receive size over error	The slave receive size is too large.
E61	Slave no normal response reception error	Normal response cannot be received from the slave.
E62	Sending-slave CPU type error	The CPU type of the sending slave is invalid.
E63	Message-buffer information type error	The message-buffer information type is invalid.
E68	Emergency-stop status requiring reset recovery (Not error)	Reset the emergency stop and then reconnect the power.
E69	Abnormal 24-V I/O power source	The 24-V I/O power source is abnormal.
E6B	Shutdown factor indeterminable error	Shutdown factor cannot be determined.
E6C	DO output current error	The DO output current is abnormal. The power must be reconnected.

Error No.	Error name	Description, action, etc.
E6D	Drive-source cutoff relay error	The drive-source cutoff relay may have been melted.
E6E	Power-stage rating (W) mismatch error	A power stage with inappropriate rated capacity (W) is installed.
E6F	Power-stage rating (V) mismatch error	A power stage with inappropriate rated voltage (V) is installed.
E70	Motor-drive power rating (V) mismatch error	A motor-drive power source with inappropriate rated voltage (V) is installed.
E71	Encoder configuration information outside supported function information range	An encoder whose configuration information is outside the range supported by the driver unit is installed.
E72	Motor configuration information outside supported function information range	A motor whose configuration information is outside the range supported by the driver unit is installed.
E73	Encoder resolution mismatch error	The encoder resolution in the system's axis-specific parameter and that of the installed encoder do not match.
E74	Encoder division ratio mismatch error	The encoder division ratio in the system's axis-specific parameter and that of the installed encoder do not match.
E75	Encoder linear/rotary type mismatch error	The encoder linear/rotary type in the system's axis-specific parameter and that of the installed encoder do not match.
E76	Encoder ABS/INC type mismatch error	The encoder ABS/INC type in the system's axis-specific parameter and that of the installed encoder do not match.
E77	Magnetic-pole sensor installation specification mismatch error	The magnetic-sensor installation specification in the system's axis-specific parameter and that of the installed encoder do not match.
E78	Brake installation specification mismatch error	The brake installation specification in the system's axis-specific parameter and that of the installed encoder do not match.
E79	Abnormal response error when sending EEPROM-data setting slave command	An abnormal response was received when an EEPROM-data setting slave command was sent.
E7A	Maximum receive size over error when sending EEPROM-data setting slave command	The receive size exceeded the limit value when an EEPROM-data setting slave command was sent.
E7B	Motor-drive power ON timeout error	Abnormal current flow from the motor-drive power source
E7C	Register read/write test error	Error reading/writing the register
E7D	Linear-movement axis parameter error	Check axis-specific parameter Nos. 38, 68, 1, etc.
E7E	Parameter error	The parameter is invalid.
E7F	Stroke parameter error	Check axis-specific parameter Nos. 7, 8, 1, etc.
E80	Unsupported card error	An unsupported card is installed in an I/O slot.
E81	Priority auto-assignment card non-detection error	Priority auto-assignment card cannot be detected.
E82	Card mismatch error	The combination or positioning of I/O slot cards has a problem.
E83	I/O slot card error	The I/O slot card is invalid.
E84	Resolution parameter error	Check axis-specific parameter Nos. 47, 50, 51, 44, 42, 43, 1, 37, etc.
E85	Driver ready OFF factor indeterminable error	Driver ready OFF factor cannot be determined.
E86	Fieldbus error (FBVCCER)	A fieldbus error (FBVCCER) was detected.
E87	Fieldbus error (FBPOWER)	A fieldbus error (FBPOWER) was detected.

Error No.	Error name	Description, action, etc.
E88	Power error (Other)	A power error (Other) was detected. This error also generates when the power OFF → ON interval is short. After the power has been turned off, be sure to wait for at least 5 seconds before turning it back on. Abnormal regenerative resistance temperature is also suspected.
E89	SCIF open error in non-AUTO mode (Servo in use)	In a mode other than AUTO, opening of the serial 1 channel (also used by the PC software/TP port) from a SEL program is prohibited while the servo is in use (to ensure safety).
E8A	SEL program flash-ROM status error	Data is not written to the flash ROM correctly or written in an old, incompatible application version.
E8B	Symbol definition table flash-ROM status error	Data is not written to the flash ROM correctly or written in an old, incompatible application version.
E8C	Position data flash-ROM status error	Data is not written to the flash ROM correctly or written in an old, incompatible application version.
E8D	Parameter flash-ROM status error	Data is not written to the flash ROM correctly or written in an old, incompatible application version.
E8F	Fieldbus logic error	It is a logic error in fieldbus initializing.
F00	Shutdown error (hi_sysdwn ( ) definition)	A shutdown error (hi_sysdwn ( ) definition) was detected.
F03 to F58	Shutdown error (OS call error)	A shutdown error (OS call error) was detected.
F60	System-down level error-call procedure error	A system-down level error-call procedure error was detected.
F61	Interpreter-task end task ID error	An interpreter-task end task ID error was detected.
F66	Servo control underrun error	Servo control underrun error or communication error between the driver board and main CPU board (FPGA) has been detected.
F6A to FA0	Undefined exception/interruption error	An undefined exception/interruption occurred.
FB0	TMU0 interruption error	A TMU0 interruption error was detected.
FB1	Application code SDRAM copy error (Checksum)	The sum of 4 bytes does not match between the corresponding sections after FROM → SDRAM program copy.
FB2	Installed flash ROM type mismatch (Application)	The flash ROM type anticipated in the software does not match the flash ROM type actually installed. Check the combination of software and hardware.
FB8	Undefined NMI error	An undefined NMI interruption occurred.
FF0 to FFF	Shutdown error (hi_sysdwn ( ) definition)	A shutdown error (hi_sysdwn ( ) definition) was detected.

6.3 Error List (MAIN Core)

(In the panel window, the three digits after “E” indicate an error number.)

Error No.	Error name	Description, action, etc.
A70	SCIF overrun error	Communication error. Check for noise, connected equipment and communication setting. (When updating the application, connect to a PC and use IAI’s update tool.)
A71	SCIF framing error	Communication error. Check for noise, shorted/disconnected communication cable, connected equipment and communication setting. (When updating the application, connect to a PC and use IAI’s update tool.)
A72	SCIF parity error	Communication error. Check for noise, shorted/disconnected communication cable, connected equipment and communication setting. (When updating the application, connect to a PC and use IAI’s update tool.)
A73	IAI protocol header error	Communication protocol error. Check for noise and connected equipment. (When updating the application, connect to a PC and use IAI’s update tool.)
A74	IAI protocol terminal ID error	Communication protocol error. Check for noise and connected equipment. (When updating the application, connect to a PC and use IAI’s update tool.)
A75	IAI protocol command ID error	Communication protocol error. Check for noise and connected equipment. (When updating the application, connect to a PC and use IAI’s update tool.)
A76	IAI protocol checksum error	Communication protocol error. Check for noise and connected equipment. (When updating the application, connect to a PC and use IAI’s update tool.)
A77	Motorola S record type error	The update program file is invalid. Check the file.
A78	Motorola S checksum error	The update program file is invalid. Check the file.
A79	Motorola S load address error	The update program file is invalid. Check the file.
A7A	Motorola S write address over error	The update program file is invalid. Check the file.
A7B	Flash timing limit over error (Write)	Error writing the flash ROM (When updating)
A7C	Flash timing limit over error (Erase)	Error erasing the flash ROM (When updating)
A7D	Flash verify error	Error erasing/writing the flash ROM (When updating)
A7E	Flash ACK timeout	Error erasing/writing the flash ROM (When updating)
A7F	Head sector number specification error	Error erasing the flash ROM (When updating)
A80	Sector count specification error	Error erasing the flash ROM (When updating)
A81	Write-destination offset address error (Odd-numbered address)	The address written during flash ROM write (when updating) is invalid. Check the update program file.
A82	Write-source data buffer address error (Odd-numbered address)	Error writing the flash ROM (When updating)
A83	Invalid code sector block ID error	The flash ROM is new, or the program currently written to the flash ROM is invalid because the last update was aborted. The ROM can be updated without problem.
A84	Code sector block ID erase count over	The number of times the flash ROM was erased exceeded the allowable count.
A85	FROM write request error before erase is complete	When updating, a flash-ROM write command was received before a flash-ROM erase command. Confirm that the update program file is valid and then perform update again.

Error No.	Error name	Description, action, etc.
A87	Motorola S byte count error (Detected by the core)	The update program file is invalid. Check the file.
A88	Message conversion error (Detected by the core)	The received message does not match the message format or contains invalid data. Check the message sent from the host communication device.
A89	Update target non-specification error (Detected by the core)	An update command was received before the update target was correctly specified during update processing. Check if an appropriate update PC tool is used and if the target specification and other settings of the update PC tool are correct.
A8A	Update system code error (Detected by the core)	The system code in the message of the received update target specification command does not match the controller system. Check the target specification and other settings of the update PC tool.
A8B	Update unit code error (Detected by the core)	The unit code in the message of the received update target specification command does not match the controller unit that can be updated. Check the target specification and other settings of the update PC tool.
A8C	Update device number error (Detected by the core)	The device number specified in the message of the received update target specification command is not appropriate. Check the target specification, device number and other settings of the update PC tool.
A8D	Flash busy reset timeout (Detected by the core)	Error erasing/writing the flash ROM
A8E	Unit type error (Detected by the core)	The unit type in the received command message is invalid or not supported.
CD0	Drive unit error (Driver detection)	Error notification from the driver
CD1	Encoder error (Driver detection)	Error notification from the driver
CD2	Driver CPU error (Driver detection)	Error notification from the driver
CD3	Servo control error (Driver detection)	Error notification from the driver
CD4	Command error (Driver detection)	Error notification from the driver
CD5	Motor temperature error (Driver detection)	Error notification from the driver
E90	Core code flash-ROM status error	The core program is invalid. Contact the manufacturer.
E91	Application code flash-ROM status error	The application program is invalid. Contact the manufacturer.
E92	Core code sum error	The core program is invalid. Contact the manufacturer.
E93	Application code sum error	The application program is invalid. Contact the manufacturer.
E94	Timing limit over error (Flash erase)	Error erasing the flash ROM
E95	Flash verify error (Flash erase)	Error erasing the flash ROM
E96	Flash ACK timeout (Flash erase)	Error erasing the flash ROM
E97	Head sector number specification error (Flash erase)	Error erasing the flash ROM
E98	Sector count specification error (Flash erase)	Error erasing the flash ROM
E99	Timing limit over error (Flash write)	Error writing the flash ROM
E9A	Flash verify error (Flash write)	Error writing the flash ROM
E9B	Flash ACK timeout (Flash write)	Error writing the flash ROM
E9C	Write-destination offset address error (Flash write)	Error writing the flash ROM
E9D	Write-source data buffer address error (Flash write)	Error writing the flash ROM

Error No.	Error name	Description, action, etc.
E9E	Watchdog reset occurrence error	A WDT (watchdog timer) was manually reset (error detection).
E9F	Exception occurrence error while BL = 1 (NMI)	An exception occurred while the block bit in the CPU status register was “1.” (NMI)
EAD	Exception occurrence error while BL = 1 (Other than NMI)	An exception occurred while the block bit in the CPU status register was “1.” (Other than NMI)
EA1	Bit exception reset due to command/data TLB duplication	This reset occurs when there are multiple TLB entries corresponding to the virtual address.
EA2	Undefined exception/interruption error	An undefined exception/interruption occurred.
EA3	AC-power cutoff detection error	An AC-power cutoff was detected.
EA4	Abnormal standby power detection error	Abnormal standby power was detected.
EA5	Regenerative resistance temperature error	A regenerative resistance temperature error was detected.
EA6	AC-power overvoltage error	An AC-power overvoltage error was detected.
EA7	Motor-power overvoltage error	A motor-power overvoltage error was detected.
EA8	FROM-write bus width error	A write operation other than 32-bit long word access was detected while writing the flash ROM.
EA9	FROM write protect error	Write operation to a write-protected flash ROM area (FRMWE bit in DEVCTR = 1) was detected.
EAA	SDRAM write/read test error	The SDRAM is faulty. Contact the manufacturer.
EAB	Application-update SCIF send-queue overflow error	An overflow occurred in the send queue.
EAC	Servo control underrun error	A servo control underrun error was detected.
EAD	Boot error	A FPGA boot watchdog was detected. The core program may not be running properly.
EAE	Application-update SCIF receive-queue overflow error	Excessive data is received from outside. (Confirm that a PC and IAI’s update tool are used to update the application.)
EAF	Installed flash ROM type mismatch (Core)	The flash ROM type anticipated in the software does not match the flash ROM type actually installed. Check the combination of software and hardware.
EB0	Undefined NMI error (Core)	An undefined NMI interruption occurred.
EB1	FPGA writing and reading test error (Core)	It is an error in writing / reading in FPGA.
EB2	Flash busy reset timeout (Detected by the core)	Malfunction of the flash ROM. The flash ROM is not reset from the busy mode.
EB3	CPU clock operation mode error	[Detail & Cause] It has been detected the operation is made in an unsupported or inappropriate CPU clock operation mode. There is a concern of an error operation caused by malfunction of the hardware, noise and so on. [Countermeasure] Contact IAI.

Chapter 7 Appendix

7.1 Work and Tool Coordinate System Features for Linear Axis

In the applicable model below, groups of axes can be structured by indicating linear axes in parameters, and the work coordinate system and tool coordinate system can be determined to these axis groups.
The structured axis groups are called “coordinate system definition unit”, and each axis constructing the unit is called “coordinate system definition unit axis”.

○ List of Applicable Model and Version for Linear Axis Work and Tool Coordinate System Features

Model Name	Main Application Version
TTA	V 2.00 or later

○ List of Applicable Tool and Version for Linear Axis Work and Tool Coordinate System Features

Tool Name	Main Application Version
PC soft	V 12.03.00.00 or later
TB-02	V 1.00 or later
TB-01	V 1.50 or later

The coordinate system definition unit axis usually makes positioning of the tool attachment datum point (*1) or tool tip on the selected work coordinate system. However, it makes positioning of SEL language commands TMPI, TMLI and XY (tool) coordinate system jog on the tool coordinate system.

(*1) Tool Attachment Datum Point (P_{T0}) : It is a point of datum when a tool is attached.
If there is R-axis in the coordinate system constructing axes, it will be one point on the rotation axis of R-axis.
If there is no R-axis in the coordinate system constructing axes, it will be one point on the axis that a tool is attached.

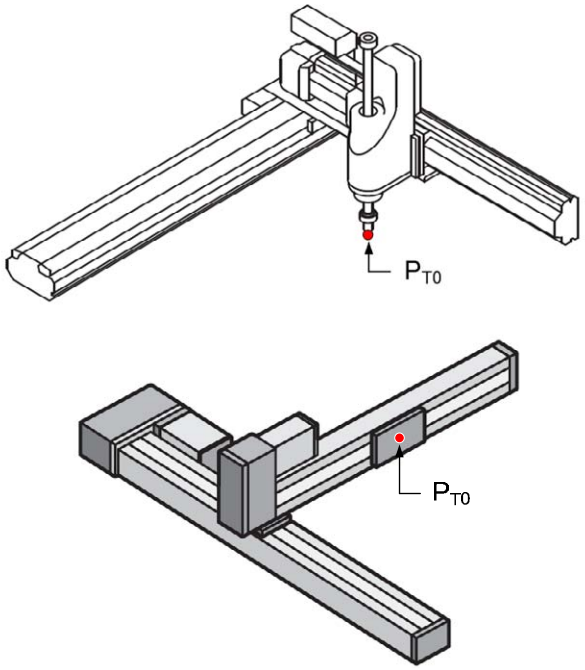

Figure : Example for Tool Attachment Datum Point
(Left : Combination for Four-Axis, Right : Combination for Two-Axis)

7.1.1 Coordinates for Coordinate System Definition Unit

The coordinate system for the coordinate system definition unit consists of four coordinate axes at the maximum (X-axis, Y-axis, Z-axis and R-axis).
At this time, it should be premised that the physical axes applicable for each coordinate axis satisfy the following conditions.

- X-axis, Y-axis and Z-axis are laid orthogonally to each other.
- The center axis of rotary for the R-axis is laid orthogonally to XY plane. (It is parallel to Z-axis if there is Z-axis.)
- A tool is attached on the R-axis if there is R-axis. (It should be premised that the tool attachment datum point is on the R rotation axis.)

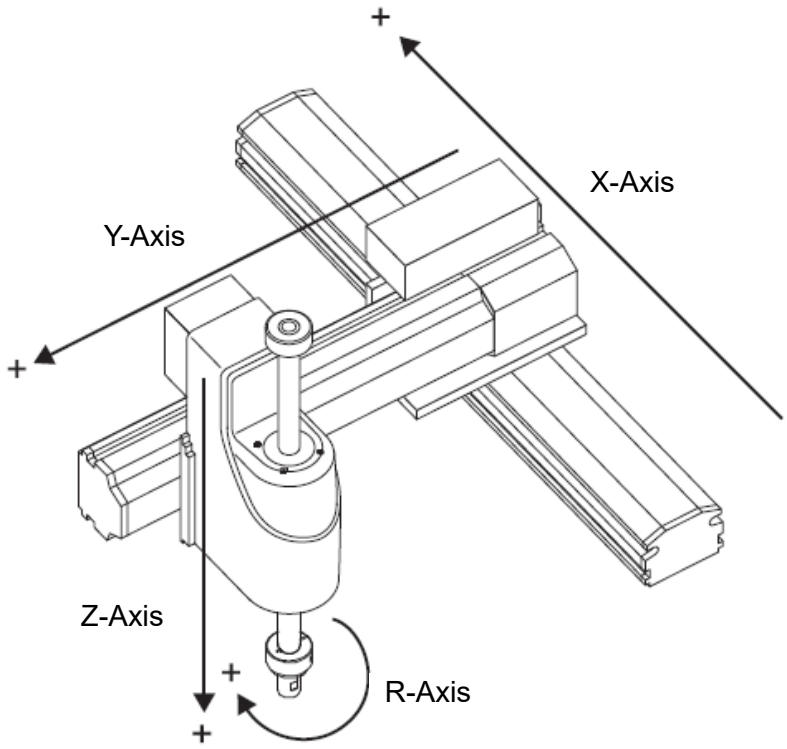

Figure: Example for orthogonal unit satisfying conditions above

[1] Each Axis System

Each axis system is the coordinate system specific for each linear axis.
In below, shows each axis system in four-axis type TTA for example.

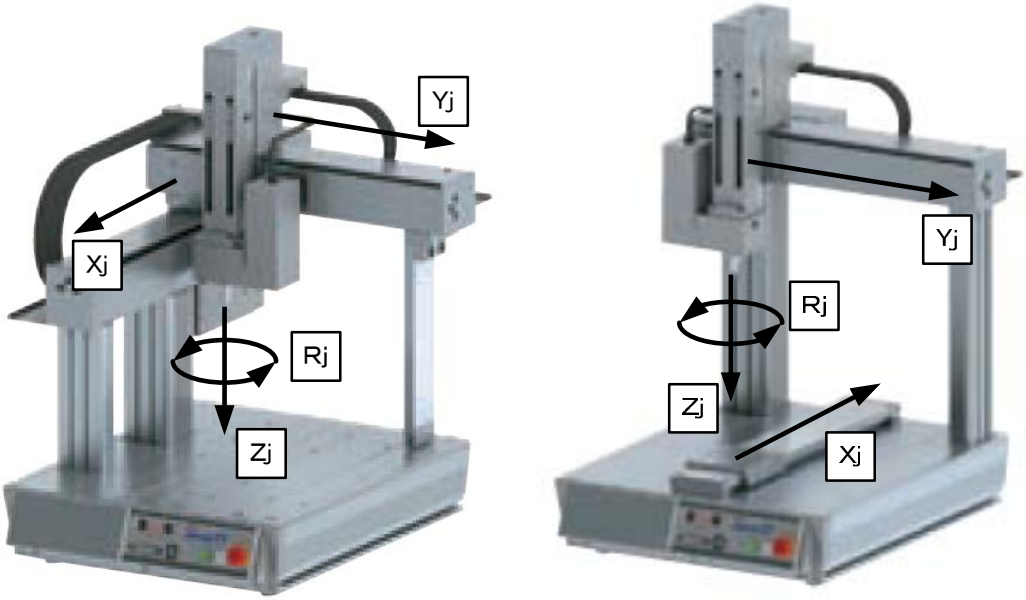

Figure : Example for Each Axis System in Four-Axis Type TTA (XYZ Home Standard Specification) (Left: TTA-C4 / Right:TTA-A4)

[2] Base Coordinate System

It is the coordinate system to indicate the position of the datum point for tool installation against the work piece mount face. Work Coordinate System No. 0 (work coordinate system offset 0) = Base Coordinate System. X axis of Base Coordinate System is described as Xb, Y axis as Yb, Z axis as Zb and R axis as Rb.

(Example) TTA-C4 (XYZ Home Standard Specification)

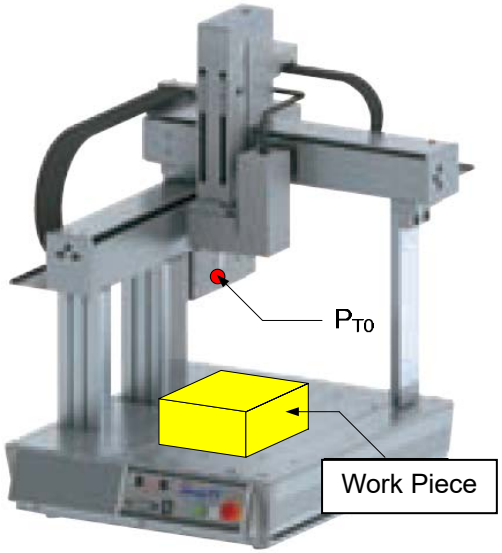

The base coordinate system can be defined as shown below.

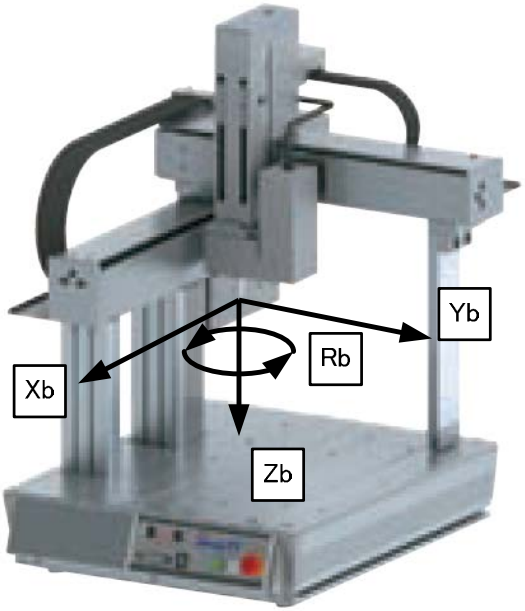

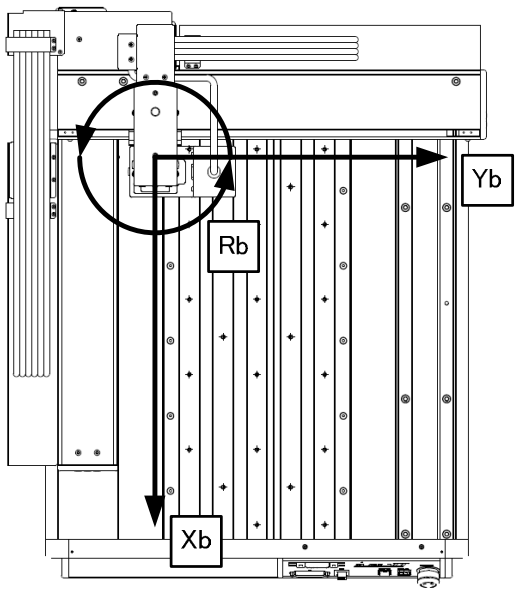

Also, when a work piece is mounted on an axis of either X, Y or Z-axis, the positive side of the base coordinate system is the opposite direction of the operation direction of the physical axis. For instance, in below explains for when a work piece is mounted on the X-axis in TTA-A4 (XYZ Home Standard Specification).
In this case, if moving the X-axis in the positive direction of each axis system, the tool attachment datum point seems to move in opposite direction to the motion if viewed from the work piece.

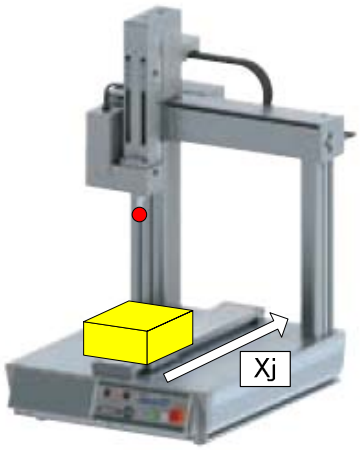

Therefore, the base coordinate system is shown as the figure below.

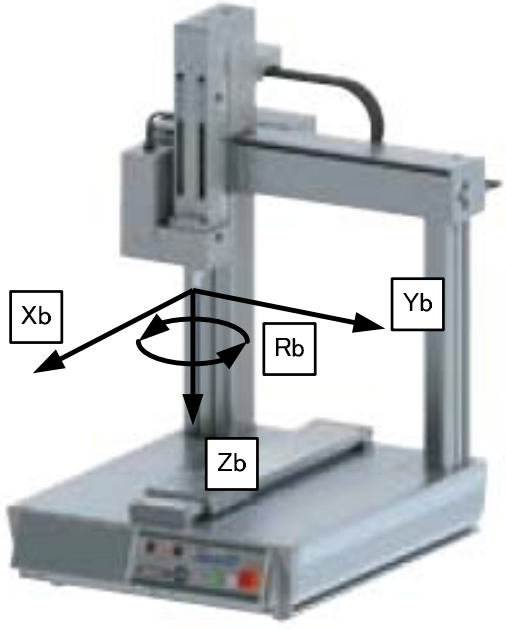

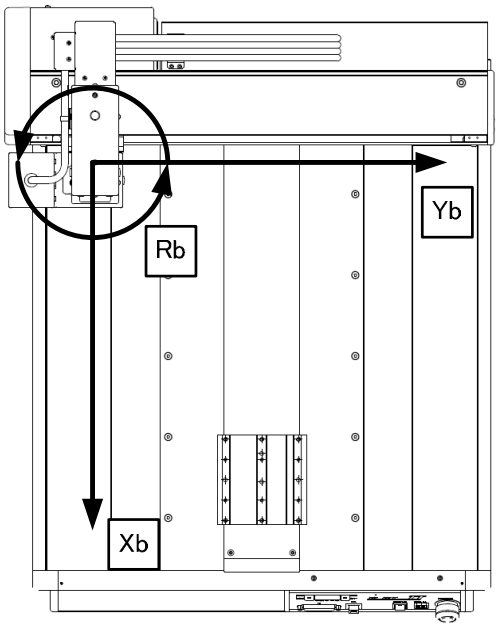

In below, shows the definition related to the home of the base coordinate system and the direction of coordinates.

Home	:	The position of the tool attachment datum point under condition that each axis system coordinates for all the unit constructing axes = 0
Positive direction of coordinate	:	The direction that the tool attachment datum point moves to the work piece mount face when each axis in the each axis system is moved in the positive direction

[3] Work Coordinate System

It is the 32 kinds of coordinate systems defined by the offset of each axis against the base coordinate system.
Work Coordinate System No. 0 is reserved as Base Coordinate System (= Work Coordinate System Offset = 0) by the system.

Set the offset of each axis as described below.

- X, Y, Z Offset
  Distance from the base coordinate system home to the work coordinate system home along Xb, Yb and Zb directions
- R Offset
  Amount of work coordinate system rotation when base coordinate system taken as the datum

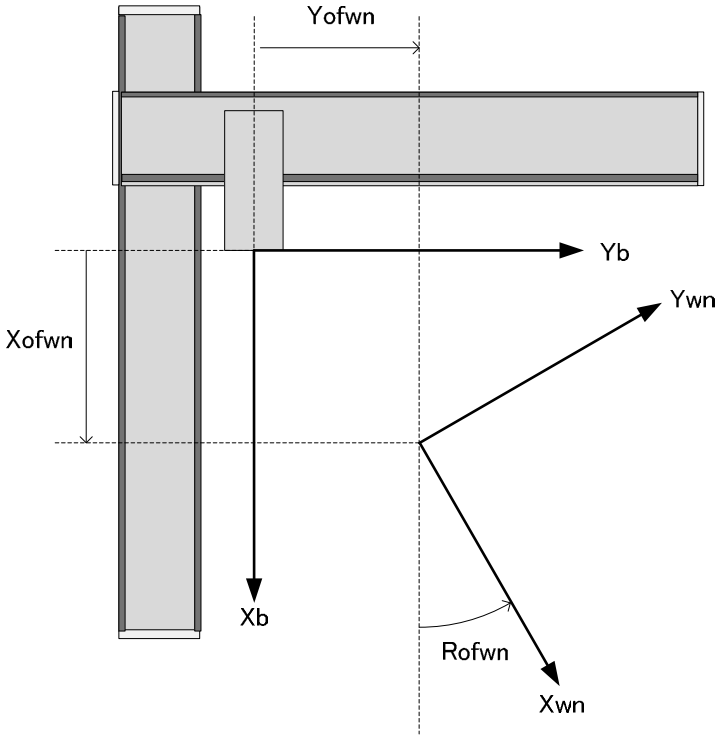

Also, the direction of the coordinate system rotation (positive direction of R offset) is defined as described below by the axis structure of the coordinate system definition unit.

· When no R-axis in constructing axes · · · · · · · Rotating Direction from Xb positive direction to Yb positive direction · When there is R-axis in constructing axes · · · Rb + Direction

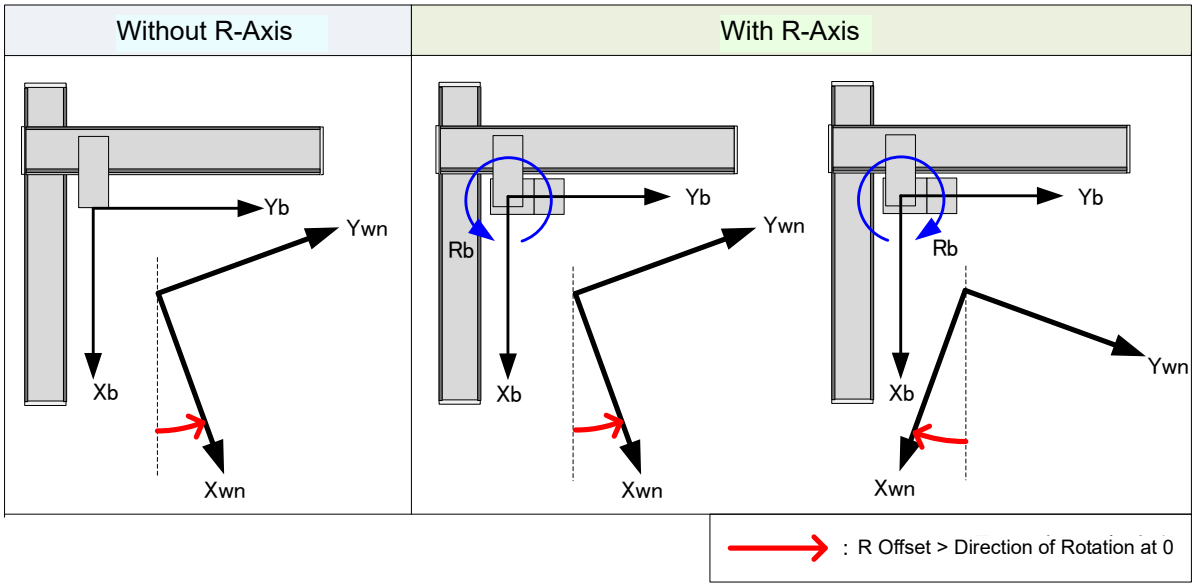

(1) Setting of Work Coordinate System

When required to define Work Coordinate System No. 1 and No. 2 as shown in the figure below;

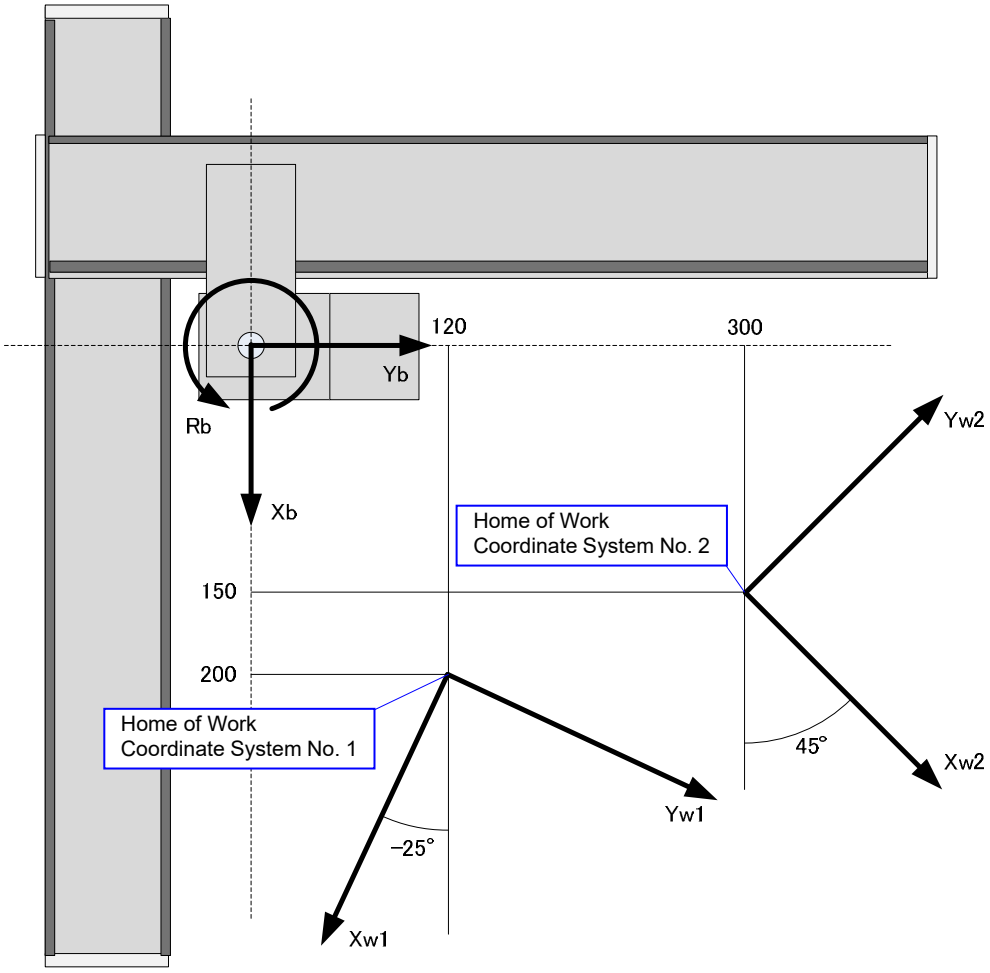

The offset of Work Coordinate System No. 1 and No. 2 are to be set as shown in the table below.

Work Coordinate System No.	Offset			
	X [mm]	Y [mm]	Z [mm]	R [deg]
1	200.000	120.000	0.000	-25.000
2	150.000	300.000	0.000	45.000

(2) Positioning on Work Coordinate System

Select the work coordinate system to be used and perform positioning.
When selecting the work coordinate system number in SEL program, use SLWK Command.
Also, the selected work coordinate system number is valid after program complete and after rebooting.

1) When having PTP positioning to Position No. 5 and No. 6 on Work Coordinate System No. 1.

Work Coordinate System No.	Offset			
	X [mm]	Y [mm]	Z [mm]	R [deg]
1	200.000	120.000	0.000	-25.000

Position No.	Coordinate Data			
	Axis1(X)	Axis2(Y)	Axis3(Z)	Axis4(R)
5	0.000	0.000	0.000	0.000
6	50.000	40.000	0.000	-45.000

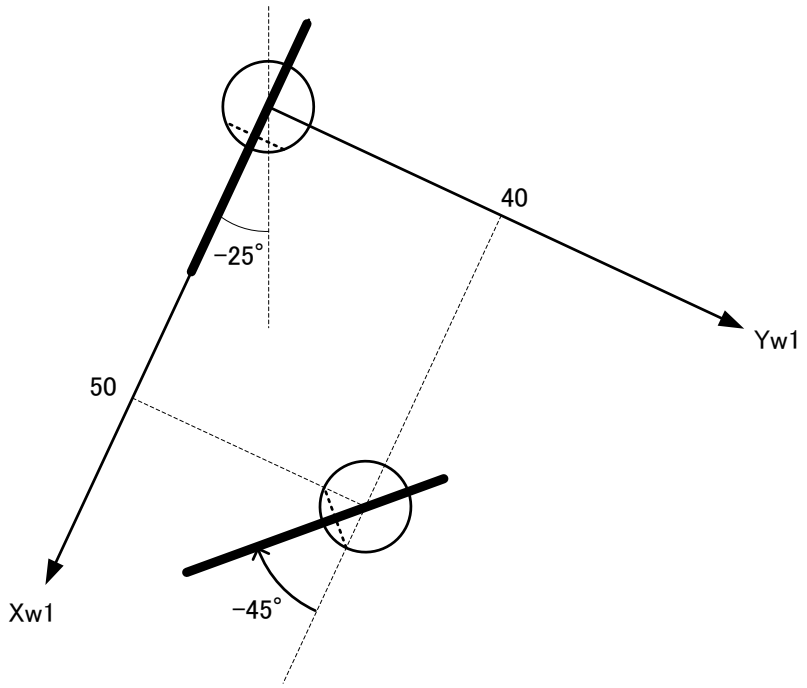

(* Example for when the datum surface on the R-axis orients Xb positive direction when each axis system coordinate on all the unit axes = 0)

2) When having PTP positioning to Position No. 5 and No. 6 on Work Coordinate System No. 2.

Work Coordinate System No.	Offset			
	X [mm]	Y [mm]	Z [mm]	R [deg]
2	150.000	300.000	0.000	45.000

Position No.	Coordinate Data			
	Axis1(X)	Axis2(Y)	Axis3(Z)	Axis4(R)
5	0.000	0.000	0.000	0.000
6	50.000	40.000	0.000	-45.000

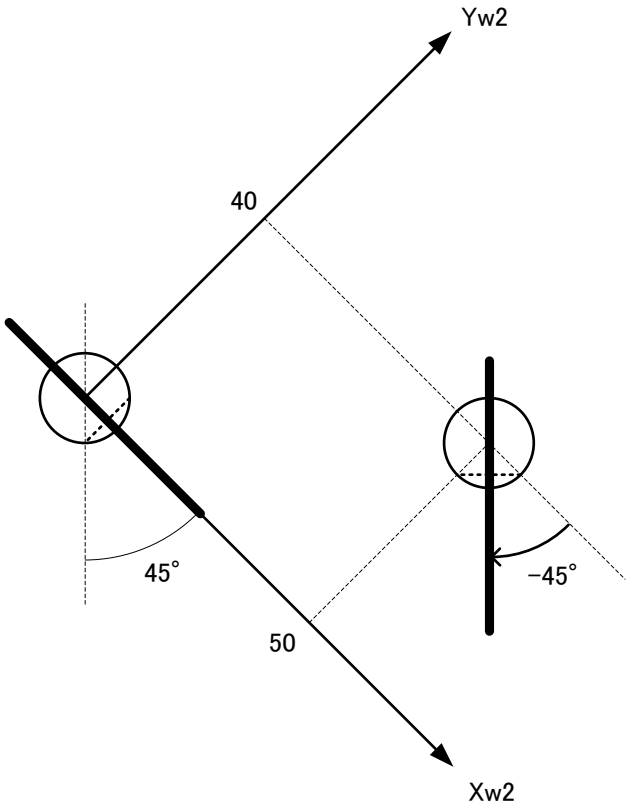

[4] Tool Coordinate System

It is the 128 kinds of coordinate systems defined by the too (such as hand) dimensions (offset) of that attached on the tool attached position. Work Coordinate System No. 0 is reserved as offset = 0 of Tool Coordinates by the system.
Select the defined tool coordinate system number, and it is used as the destination point at positioning of the tool tip as well as the tool attached position.

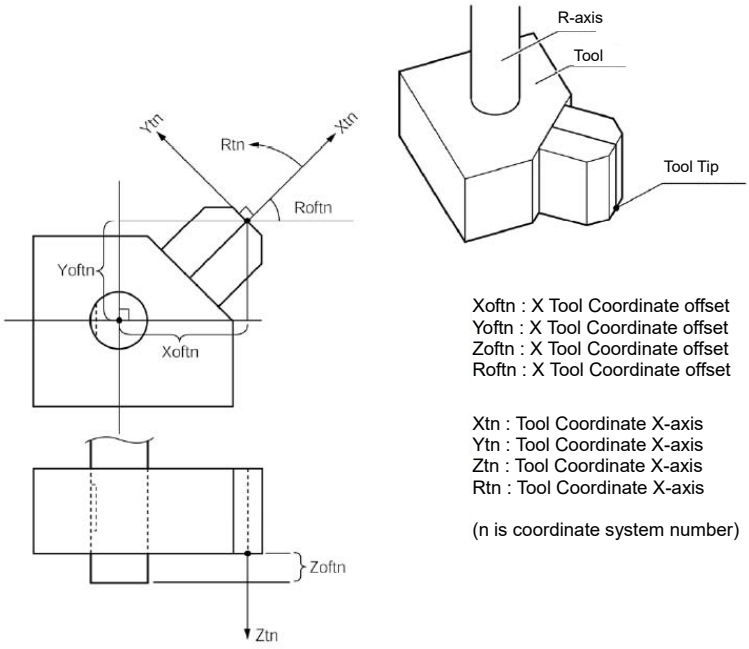

Xoftn : X Tool Coordinate offset
Yoftn : X Tool Coordinate offset
Zoftn : X Tool Coordinate offset
Roftn : X Tool Coordinate offset

Xtn : Tool Coordinate X-axis
Ytn : Tool Coordinate X-axis
Ztn : Tool Coordinate X-axis
Rtn : Tool Coordinate X-axis

(n is coordinate system number)

Select the defined Tool Coordinate System and operate the R axis with JOG operation, and such movement as shown in the figure below can be performed.

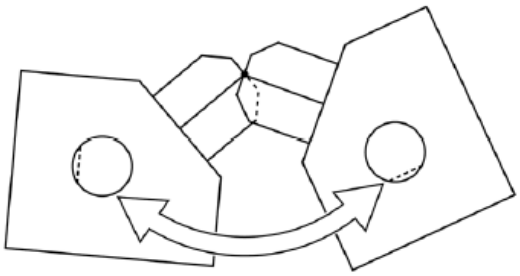

● Regarding directions of X and Y axes (Xtn and Ytn) in tool coordinate system
With R-Axis : Varies relying on coordinates of R-axis
Without R-Axis : Always fixed, the directions depends on R offset of tool coordinate system

(1) Setting the tool coordinate system

Set the offset amount from the tool attached position to the tool tip.

Set the tool offset as explained below under condition that **each axis system coordinates for all the unit constructing axes is 0 is taken as the datum.**

- X, Y, Z offset
  Distance from the tool attached position to the tool tip along Xb, Yb and Zb directions of the base coordinate system
- R offset
  Angle of the working direction with Xb positive direction as the datum
  (Definition for direction of angle is the same as work coordinate system R offset)

- Example for Tool Coordinate System Setting

When required to set Tool Coordinate System No. 1 as shown in the figure below;
(The figure below is assumed to show that each axis system coordinates for all the unit constructing axes is 0)

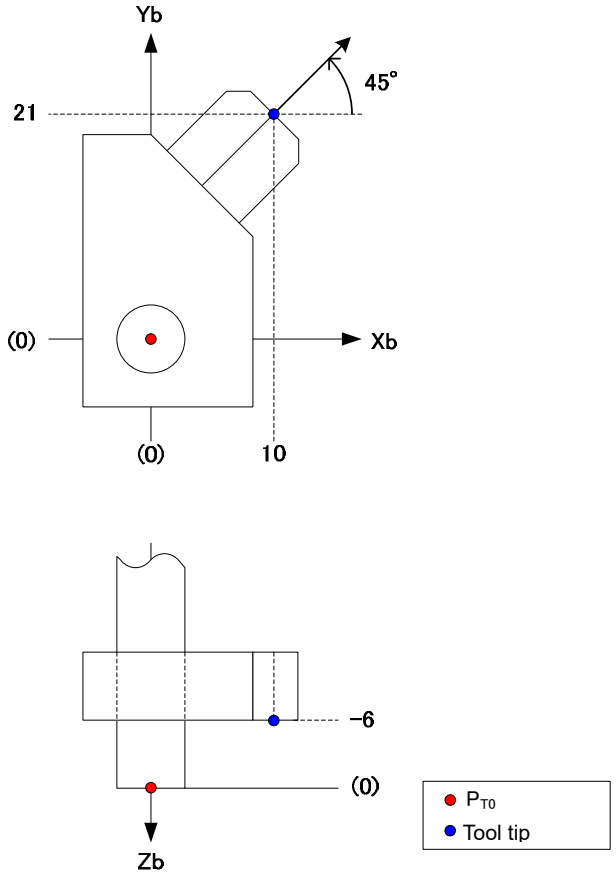

The offset of Tool Coordinate System No. 1 are to be set as shown in the table below.

Tool Coordinate System No.	Offset			
	X [mm]	Y [mm]	Z [mm]	R [deg]
1	10.000	21.000	-6.000	45.000

(2) Positioning using Tool Coordinate System Offset

Select the work coordinate system to be used and perform positioning.
When selecting the work coordinate system number in SEL program, use SLTL Command.
Also, the selected work coordinate system number is valid after program complete and after rebooting.

1) When having the tool tip on Tool Coordinate System No. 1 to perform PTP positioning from Position No. 5 to No. 6 in Work Coordinate System No. 1;

Work Coordinate System No.	Offset			
	X [mm]	Y [mm]	Z [mm]	R [deg]
1	200.000	120.000	0.000	-25.000

Tool Coordinate System No.	Offset			
	X [mm]	Y [mm]	Z [mm]	R [deg]
1	10.000	21.000	-6.000	45.000

Position No.	Coordinate Data			
	Axis1(X)	Axis2(Y)	Axis3(Z)	Axis4(R)
5	0.000	0.000	0.000	0.000
6	50.000	40.000	0.000	-45.000

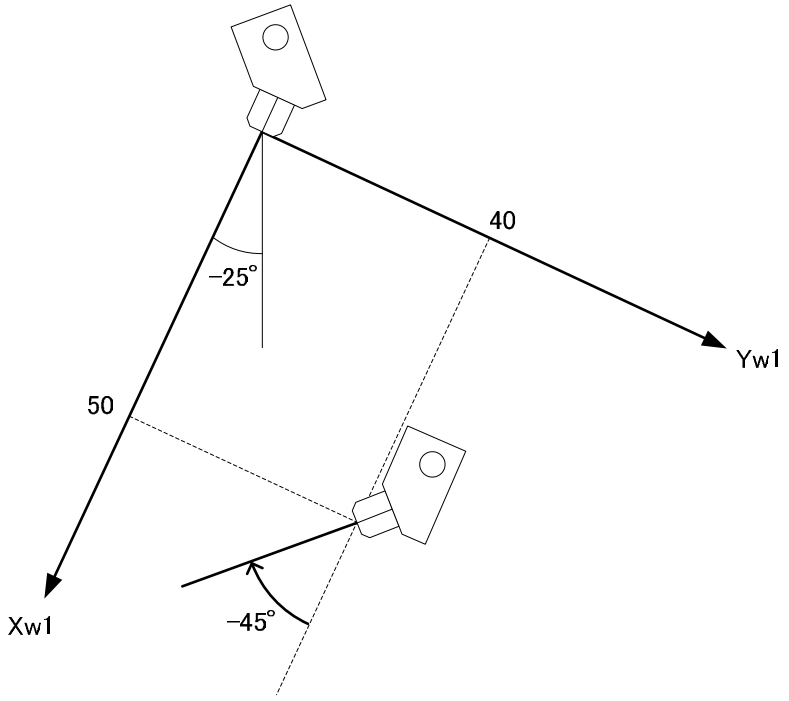

2) When having the tool tip on Tool Coordinate System No. 1 to perform PTP positioning from Position No. 5 to No. 6 in Work Coordinate System No. 2;

Work Coordinate System No.	Offset			
	X [mm]	Y [mm]	Z [mm]	R [deg]
2	150.000	300.000	0.000	45.000

Tool Coordinate System No.	Offset			
	X [mm]	Y [mm]	Z [mm]	R [deg]
1	10.000	21.000	-6.000	45.000

Position No.	Coordinate Data			
	Axis1(X)	Axis2(Y)	Axis3(Z)	Axis4(R)
5	0.000	0.000	0.000	0.000
6	50.000	40.000	0.000	-45.000

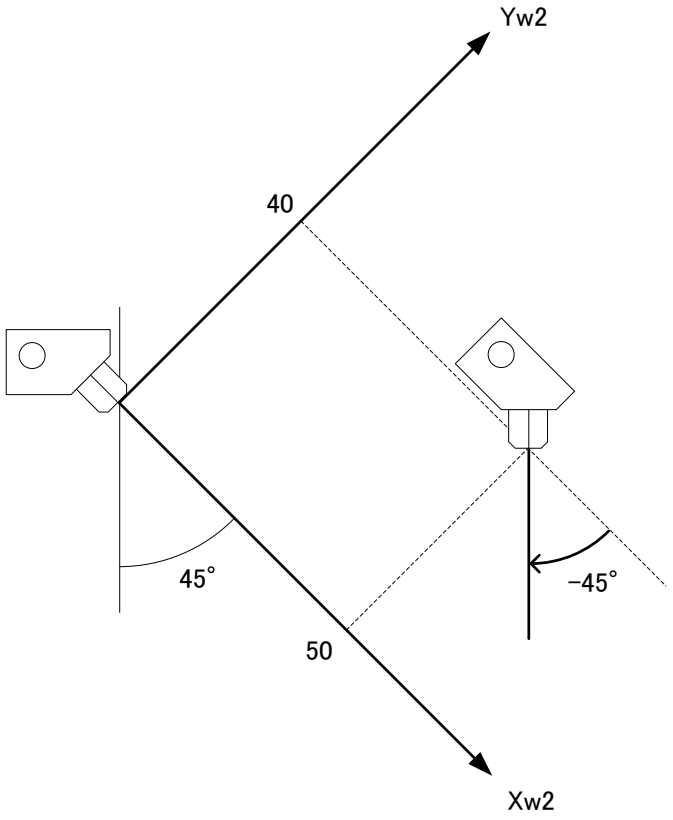

7.1.2 Setting of parameters

Shown below, describes how to set the parameters necessary for using the work and tool coordinate system features on the linear axis.

• By setting All Axes Parameter No. 55 “Coordinate System Definition 1 Control” to “1h”, the coordinate system definition unit becomes effective.

No.	Parameter name	Initial value (Reference)	Input range	Unit	Access right	Remarks
55	Coordinate System Definition 1 Control	0H	0 ~ FFFFFFFF H		F	Bits 0-3 : Unit Valid Indication (0: Invalid, 1: Valid) Bits 4-31 : Reservation

• Indicate the physical axis applicable for the coordinate axes (X-axis, Y-axis, Z-axis and R-axis) in the coordinate system in All Axes Parameter No. 56 “Coordinate System Definition 1 Constructing Axis Setting”.

No.	Parameter name	Initial value (Reference)	Input range	Unit	Access right	Remarks
56	Coordinate System Definition 1 Constructing Axis Setting	0H	0 ~ FFFFFFFFH		F	Bits 0 to 3: X Indicated Axis Number Bits 4 to 7: Y Indicated Axis Number Bits 8 to 11: Z Indicated Axis Number Bits 12 to 15: R Indicated Axis Number Bits 16 to 31: Reservation (No applicable definition axis when Axis No. = 0)

Stated below are the caution items regarding the setting of All Axes Parameter No. 56. “5C0 Coordinate System Setting Error” will occur when there is an error in setting related to these caution items described below.

- The patterns of constructing axes that are available to indicate should be either of “XY”, “XYZ”, “XYZR” and “XYR”.
- Duplicated indication of one physical axis is not allowed.
- It is necessary that the axes indicated as the X, Y and Z-axes are linear driving axes (Each Axis Parameter No. 1 = “0”), and that the axis indicated as R-axis should be rotary driving axis (Each Axis Parameter No. 1 = “1”).
- The following axes cannot be indicated.
  [Synchronized Slave Axes, Infinite Stroke Axes, Shortcut Control Valid Axes]

- There may be a case that an error such as “D41 Coordinate System Data Management Domain ID Error” occurs after conducting parameter writing → reboot when the coordinate system definition unit gets activated by setting All Axes Parameter No. 55 for the first time. In such a case, initialize the memory for the “coordinate system definition data” using the PC software or a teaching pendant and then reboot the controller.
- There will be limitation in some part of operation if indicated to the coordinate system definition unit axis. (Refer to 7.3 for details.)

- In case there is an axis indicated as the R-axis in All Axes Parameter No. 56, establish the setting in All Axes Parameter No. 57 “Coordinate System Definition 1 R-Axis Coordinates Direction Setting”.

No.	Parameter name	Initial value (Reference)	Input range	Unit	Access right	Remarks
57	Coordinate System Definition 1 R-Axis Coordinates Direction Setting	0	0 ~ 1		F	Relation between direction of rotation from X-axis to Y-axis and R-axis direction in base coordinate system 0: Same direction 1: Opposite direction

(All Axes Parameter No. 57 is the parameter to define the relations of X-axis, Y-axis and R-axis in the base coordinate system.
In case this parameter is not established correctly, the axes will not operate as expected. Pay attention when establish the setting for this parameter as the controller cannot judge right or wrong for the contents of the setting.)

Establish the setting as described below for the value in All Axes Parameter No. 57.

- When “Rb Positive Direction” is the same as “Rotating Direction from Xb Positive Direction to Yb Positive Direction” → “0”
- When “Rb Positive Direction” is opposite “Rotating Direction from Xb Positive Direction to Yb Positive Direction” → “1”

(Example) In the construction below, Rb positive direction (clockwise) is opposite the rotating direction from Xb positive direction to Yb positive direction R’ (counterclockwise), thus All Axes Parameter No. 56 should be set to “1”.

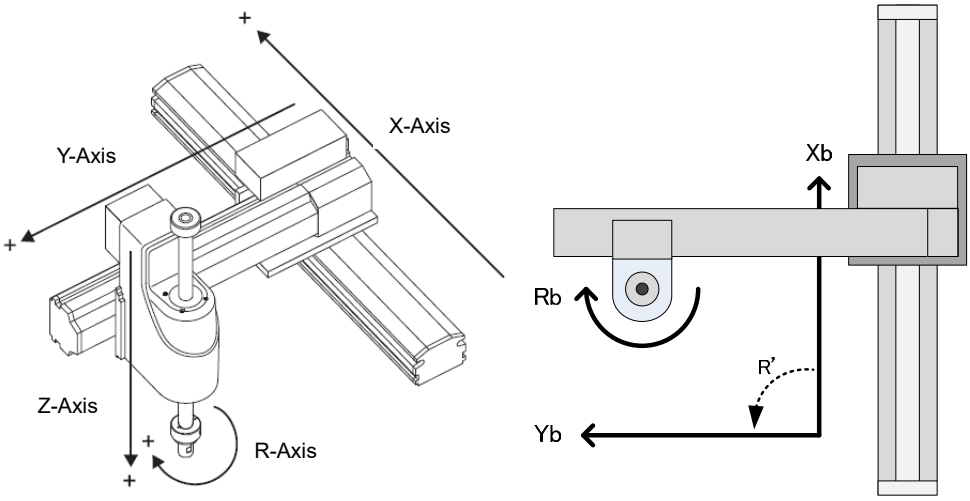

Figure: Example for unit (Left: Each axis system / Right: Base coordinate system)

(Example) Example for Standard Setting in TTA

All Axes Parameter No.55 Setting Value
1h

TTA Type	All Axes Parameter No.56 Setting Value
TTA-A2 / TTA-C2 (2-axis Type)	21h
TTA-A3 / TTA-C3 (3-axis Type)	321h
TTA-A4 / TTA-C4 (4-axis Type)	4321h

X-Axis Home Type	Y-Axis Home Type	All Axes Parameter No.57 Setting Value (for four-axis type)
Standard	Standard	0
Reversed Specification (NM)	Standard	1
Standard	Reversed Specification (NM)	1
Reversed Specification (NM)	Reversed Specification (NM)	0

* Shown above are just examples for standard settings. There would be no problem if change is made in the setting for All Axes Parameter No. 56 and 57 as long as there is no contradiction to the composition of the axes.
In such a case, make sure to check the caution items for each parameter so the settings can be established with no failure.

(Example) In TTACA (XY Home Standard Type)
- Indicate Axis1 as Y-axis and Axis2 as X-axis
  → All Axes Parameter No. 56 = “4312h”, All Axes Parameter No. 57 = “1”
- Construct the coordinate system only with Axis1 and Axis2
  → All Axes Parameter No. 56 = “21h”

7.1.3 Caution Note

[1] Limitation in Coordinate System Constructing Axes

Shown below are the cases when limitation is applied to indication for operation of X, Y and R-axes in the coordinate system definition unit.

Operations Subject for Limitation		Indicated Axis			
		X	Y	Z	R
Pressing Movement	(PUSH)	Δ*1	Δ*1	○	Δ*1
Arch motion Z-axis	(ACHZ/PCHZ)	Δ*1	Δ*1	○	×
palletize XY-axis	(PASE/PAPS)	○	○	○	×
Circular / Arc Movement 3-Dimensional Circular / Arc Movement	(CIRS/ARCS) (CIR/ARC)	○	○	○	×
Circular / Arc Movement 2 Arc Movement with Center Indication	(CIR2/ARC2) (ARCC/ARCD)	○	○	Δ*2	×

○ : Available for Indication　Δ : Available for Indication with Conditions　× : Unavailable for Indication

(*1) Permitted only when operated physical axis is one axis to the indicated axis
(*2) Permitted only when operated axes are two axes in total

Example : To indicate X-axis in PUSH Command
1) Work coordinate system R offset is 0 (in such case as Work Coordinate System No. 0)
→ Available to indicate (Only X-axis operates)
2) Work coordinate system R offset is not 0
→ Unavailable to indicate (Operation necessary on X and Y-axes)

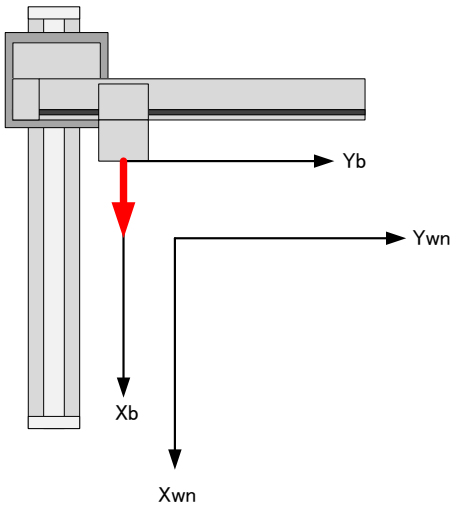

○ : Available for Indication

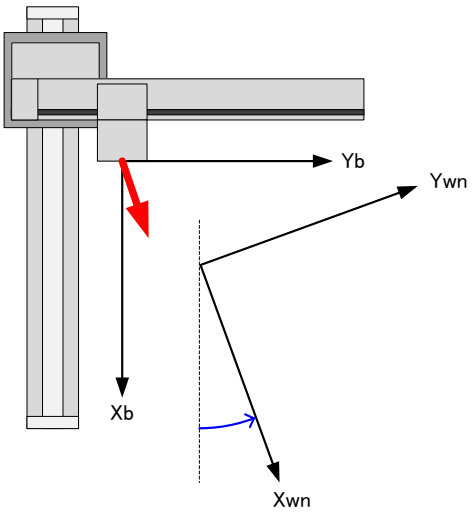

× : Unavailable for Indication

[2] Note for Other Caution

・While in operation of either X-axis or Y-axis (or R-axis) in a SEL program, or with operation of PC software or TP, X-axis and Y-axis (and R-axis) cannot be operated in another SEL program.

・When operating either X-axis or Y-axis (or R-axis), it is basically necessary that servo is turned on and home return operation is completed on all of X-axis and Y-axis (and R-axis). It could cause an error if operation is attempted with those conditions above unsatisfied.

・In the position edit window for the PC software and teaching tools applicable for the feature, when operation is made to turn on/off the servo to the coordinate system definition unit axes, servo turns on/off on all the axes in the applicable units.

・When performing CP operation on the R-axis by setting the tool coordinate system offset, the operation speed and acceleration / deceleration on the X-axis and Y-axis will be limited so they do not exceed the indicated velocity and acceleration / deceleration. Therefore, even if the indicated velocity and acceleration / deceleration are the same, the actual operation speed may tend to be slower as the tool length (distance from the tool attachment datum point to the tool tip) gets longer.

・When attempted to perform CP operation or JOG operation on the work coordinate system or tool coordinate system while the coordinate system definition unit axis is out of the soft limit, “Error No. C73 Target Track Soft Limit Exceeding Error” could occur. In such a case, use the PC software or a teaching pendant and have JOG operation on each axis system to have the axis moved inside the soft limit from outside.

・When a velocity change command is issued to CP operation including the R-axis, the specification could be limited depending on the condition. Refer in the section for CHVL Command for details. [Refer to the separate SEL Language Programming Manual.]

・When a synchronized master axis is indicated as the coordinate system definition unit axis, the applicable synchronized slave axes are to be treated as the axes outside the unit (* Operation will be synchronized to the synchronized master axis as it does in ordinary use). Therefore, the work coordinate system and the tool coordinate system are not considered in the current position display of the slave axes, and will be in the each axis system value.

7.2 Extension SIO Features

In the applicable model below, the channel available for SIO communication by parameters to the extension SIO module mounted on the extension I/O slot can be defined.

○ Extension SIO Features　　Application・Version List

Model name	Main application version
TTA	V 2.00 or later

The version of the applicable tool for this feature is as shown below.

○ Extension SIO Features　　Applicable Tool Version List

Tool name	Version
PC software	V12.03.00.00 or later
TB-02	V1.00 or later
TB-01	V1.50 or later

7.2.1 Specification

The extension SIO module can be classified to two types, RS232C and RS485, by the interface standard used. The connector type for each module is D-Sub 9-pin.

○ Communication Specification List

Item	Contents	
Interface standards	RS-232C	RS-485
Communication system	Start-Stop Synchronous Full / Half Duplex Communication	Start-Stop Synchronous Half duplex communication
Connector	D-sub9 pin	
Baud rate (bps)	9.6k,19.2k,38.4k,57.6k,76.8k,115.2k,230.4k	
Data length	7 or 8 bit	
Start bit	1 bit	
Stop bit	1 or 2 bit	
Binary classification	None, Odd or even	

7.2.2 Functions

(1) SEL Program Communication

It is a communication mode to send and receive data of the indicated SIO channels using SEL commands for communication (OPEN, READ, WRIT, CLOS, TMRW and SCHA). OPEN Command enables sending and receiving the indicated SIO channels, and READ Command receives the data up to the last character (indicated by SCHA Command) and WRIT Command sends the data in the indicated column number. (Refer to SEL programing manual for detail)

(2) IAI Protocol Communication

It is a communication mode that enables the host system to refer to data inside the controller or command to be executed using the serial communication protocol dedicated for IAI. (Refer to other documents for details for such as transfer format)

It is available exclusively in the teaching port and EtherNet channel as a default, but it is necessary to set permission to use in multiple channels for IAI protocol communication in I/O parameter in order to use it in the extension SIO channels.

The extension SIO channel available for IAI protocol communication is only User Released Channel 2 for both TTA and MSEL.

7.2.3 Caution

(1) Regarding RS-485 Communication

・As RS-485 Communication is a half-duplex communication, switching process to make receiving available is conducted after data sending in the controller. Therefore, it is necessary to add a standby time (for 3ms or more) before sending the next command after receiving a response in the host side.

(2) Regarding IAI Protocol Communication Features

・Only one channel in the execution command is valid also when use of multiple channels is permitted. The execution command is valid in the priority (*1) in MANU Mode, valid only in I/O parameter setting channel in AUTO Mode, and no response in other invalid channels. (Communication disconnected in teaching tools and PC software)
Construct the user system in order to have only one channel to send the execution command.

・When connecting a teaching tool or PC software to a channel not selected as the IAI protocol execution command valid channel (I/O Parameter No. 116) in AUTO Mode, it is necessary to use a software with the version at or later than that indicated in the list of tool versions applicable for extension SIO.
Also, as only monitor operation (data inquiry) is available, when conducting active operations such as edit or startup, set as the execution command communication valid channel in this parameter. Pay attention as having an active operation without setting as the valid channel will disconnect the communication.

∗1 Priority: (Teaching Port) > (EtherNet) > (Extension SIO)

7.2.4 Parameter Setting

Described below is regarding the parameter settings necessary in order to use the extension SIO feature.
Check the extension I/O slot number that the extension SIO module is connected when conducting the parameter setting.

(1) Extension I/O Slot

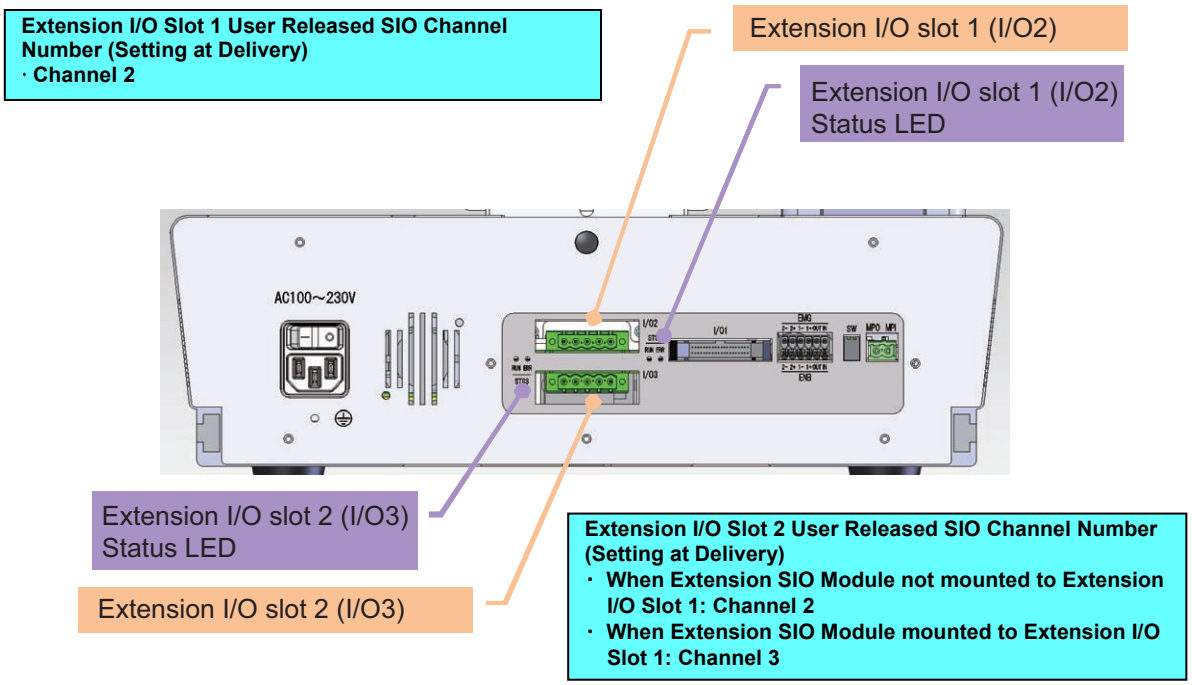

· Wiring Layout for RS232C Ports

Pin No.	Direction	Signal name	Contents
1	In	(CD)	(Carrier Detection : Not use)
2	In	RD	Received Data (RXD)
3	Out	SD	Sent Data (TXD)
4	Out	ER	Device Ready (DTR)
5	In	SG	Signal Ground
6	In	DR	Data Set Ready (DSR)
7	Out	(RS)	(Sending Request (RTS) : Not use)
8	In	(CS)	(Ready for Sending CTS) : Not use)
9	Out	NC	Not use

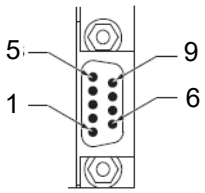

(2) Related Parameters

● Set the reception operation classification and communication type of the extension SIO channel n (n = channel number) in I/O Parameter No. 100, 102, 104 and 106 “User Release SIO Channel Attribute 1 (Extension)”. The extension I/O slot assignment number and in-board channel number are already set up at the delivery. Setting is conducted to the user release SIO channel 2 when the connection of the extension SIO module is to one module, and conducted to the user release SIO channel 2 and 3 when the connection of the extension SIO module is to two modules.

No.	Parameter name	Initial value (Reference)	Input range	Unit	Access right	Remarks
100	Attribute 1 of SIO channel 2 opened to user (Extension)	68100010H	0 ~ FFFFFFFFH		F	Bits 28-31: Baud rate type (0: 9.6, 1: 19.2, 2: 38.4, 3: 57.6, 4: 76.8, 5: 115.2k, 6: 230.4kbps) Bits 24-27: Data length (7 to 8) Bits 20-23: Stop bit length (1 to 2) Bits 16-19: Binary Classification (0: None, 1: Odd, 2: Even) Bits 12-15: System reservation Bits 8-11: Reception Operation Classification (0:RS485= Reception compulsorily enabled straight after sending process. RS232C= Reception compulsorily enabled right before sending process 1: Not to have reception compulsorily enabled at sending process Bits 4-7: In-board channel assignment number (1: 1ch, 2: 2ch) Bits 0-3: Extension I/O slot assignment number * Not to be used when set to 0
102	Attribute 1 of SIO channel 3 opened to user (Extension)	68100010H	0 ~ FFFFFFFFH		F	(Equivalent to the IO parameter No.100)
104	Attribute 1 of SIO channel 4 opened to user (Extension)	68100010H	0 ~ FFFFFFFFH		F	(Equivalent to the IO parameter No.100)
106	Attribute 1 of SIO channel 5 opened to user (Extension)	68100010H	0 ~ FFFFFFFFH		F	(Equivalent to the IO parameter No.100)

● Set the way to use communication channel of the extension SIO channel n (n = channel number) in I/O Parameter No. 101, 103, 105 and 107 “User Release SIO Channel n Attribute 2 (Extension)”.

No.	Parameter name	Initial value (Reference)	Input range	Unit	Access right	Remarks
101	Attribute 2 of SIO channel 2 opened to user (Extension)	0	0 ~ FFFFFFFFH		F	Bits 0-3: Way to use channels (0: SEL program release 1: System reservation 2: IAI protocol B * I/O Parameter No. 116 “IAI Protocol Communication Attribute” Bit 0 to 3: Available to set when IAI protocol multiple channel communication permission select = 1 (permitted) * Settable only Attribute 2 of SIO channel 2 opened to user) Bits 4-11: IAI protocol response minimum latency (ms) (Valid only in IAI protocol) (Main application part V2.00 or later)
103	Attribute 2 of SIO channel 3 opened to user (Extension)	0	0 ~ FFFFFFFFH		F	(Equivalent to the IO parameter No.101) (Main application part V2.00 or later)
105	Attribute 2 of SIO channel 4 opened to user (Extension)	0	0 ~ FFFFFFFFH		F	(Equivalent to the IO parameter No.101) (Main application part V2.00 or later)
107	Attribute 2 of SIO channel 5 opened to user (Extension)	0	0 ~ FFFFFFFFH		F	(Equivalent to the IO parameter No.101) (Main application part V2.00 or later)

●Establish setting for IAI Protocol Multiple Channel Communication Permission Select and so on in I/O Parameter No. 116 “IAI Protocol Communication Attribute”. To have IAI protocol communication in the user release SIO channel 2, it is necessary to set as IAI Protocol Multiple Channel Communication Permission Select = 1 (Permitted).

No.	Parameter name	Initial value (Reference)	Input range	Unit	Access right	Remarks
116	IAI protocol communication attribute	10	0 ~ FFFFFFFFH		F	Bits 0-3: IAI protocol multiple channel communication permission select (0: Unpermitted * Communication exclusively in priority of Teaching port > Ethernet 1: Permitted) Bits 4-11: IAI protocol execution command communication valid channel select at AUTO Mode (01H: Teaching Port 02H: Extension SIO (Attribute 2 of SIO channel 2 opened to user) 26H: Ethernet) * Valid when IAI protocol multiple channel communication permission select = 1 (Permitted) * Communication available exclusively in priority of Teaching port > Ethernet at MANU Mode * Reference commands and stop commands (execution commands) are available to communicate with all the channels. (Main application part V2.00 or later)

(3) How to Set Parameters

1) Settings in Common for SEL Program Communication / IAI Protocol Communication

・Set the communication specifications for the extension SIO user release channel number to be used. (I/O Parameter No. 100, 102, 104 and 106 “User Release Channel n Attribute 1”) (The extension I/O slot assignment and in-board channel number assignment are already set up at the delivery.)

(Example) When indicating User Release Channel No. 3 as the in-board channel 1 for the extension SIO module (RS-232C) connected to Extension I/O Slot 2, and setting to the communication specification as follows;

Baud rate : 115.2k ⇨ I/O Parameter 102 bit28-31=5
Data length : 8 Bits ⇨ I/O Parameter 102 bit24-27=8
Stop bit length : 1 Bit ⇨ I/O Parameter 102 bit20-23=1
Binary Classification : None ⇨ I/O Parameter 102 bit16-19=0
Reception Operation Classification : Reception compulsorily enabled right before sending process ⇨ I/O Parameter 102 bit 8 to 11 = 0

Establish the setting as;
I/O Parameter 102 “User Release Channel 3 Attribute 1” = 58100012h

2) IAI Protocol Communication Individual Setting

A : SEL Program Communication

・Set the way to use for the extension SIO user release channel number to be used. (I/O Parameter 101, 103, 105, 107 [SIO Channel 2 Opened to User] bit0-3)

(Example) When having the SEL program communication in User Release Channel No. 2, set as I/O Parameter 101 “User Release Channel 2 Attribute 2” bit 0 to 3 = 0.

B : IAI Protocol Communication

・Establish the setting to permit multiple channel communication for IAI protocol. (I/O Parameter 116 [IAI Protocol Communication Attribute] bit0-3)

・Set the way to use for the extension SIO user release channel number to be used. (I/O Parameter 101, 103, 105, 107 [SIO Channel 2 Opened to User] bit0-3)

・Set the minimum response latency in IAI protocol communication. (I/O Parameter 101, 103, 105, 107 [IAI Protocol Communication Attribute] bit4-11)

・Set the station code for the extension SIO user release channel number to be used. (I/O Parameter 91 “User Release SIO Channel 1 Station Code”)
(* Although it is determined as User Release SIO Channel 1, this parameter is in common for Ethernet and extension SIO.)

・Indicate the channel available for communication with execution commands in AUTO Mode. I/O Parameter 116 [IAI Protocol Communication Attribute] bit4-11)

7.2.5 Example of Use

It is an example of use when having an IAI protocol communication with PLC or the touch panel display device using the extension SIO module (CH2) mounted to Extension I/O Slot 1 while a teaching tool or PC connected to the teaching tool connector (CH1).
(Indicate Extension SIO for the IAI protocol execution command communication valid channel in AUTO Mode)

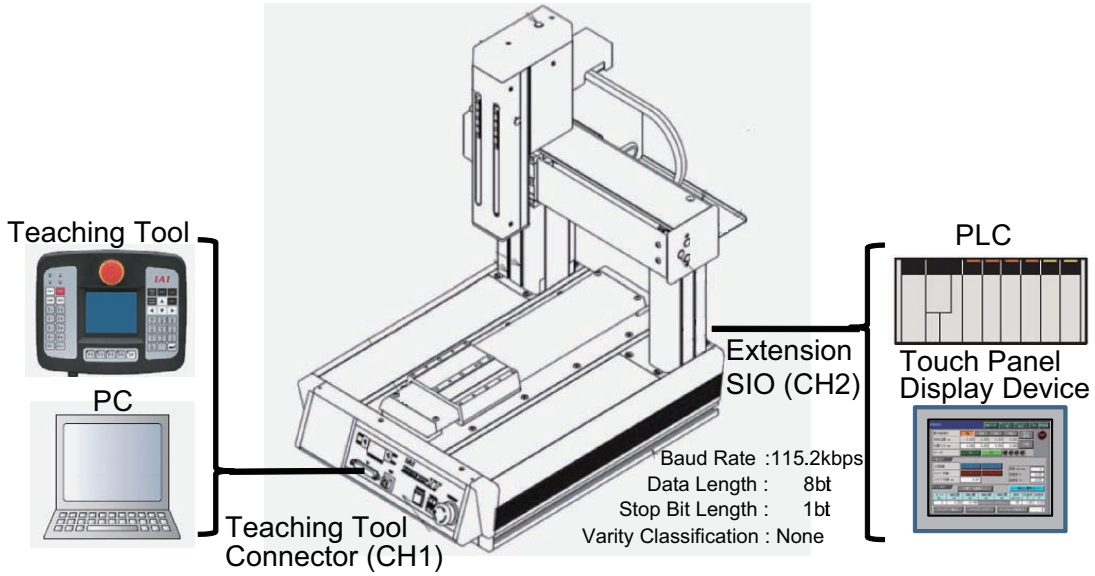

・I/O Parameter Settings
No100 (User Released SIO Channel 2 Attribute 1 (Extension))=58100011H
No101 (User Released SIO Channel 2 Attribute 2 (Extension))=00000002H
No116 (IAI Protocol Communication Attribute) =00000021H

Chapter 8 Maintenance and Inspection

8.1 Inspection Items and Schedule

Perform maintenance and inspection at the intervals specified below.
This schedule assumes that the actuator is operated eight hours a day.
If the actuator is operated at a higher utilization, such as when the machine is used continuously day and night, reduce the inspection intervals accordingly.

	External visual inspection	Internal inspection
Start of work inspection	○	
1 months after start of operation	○	
6 months after start of operation	○	○
1 year after start of operation	○	
Every 6 months thereafter	○	○
Every year thereafter	○	

8.2 External visual inspection

An external visual inspection should check the following things.

Main unit	Loose actuator mounting bolts, other loose items
Cables	Scratches, proper connections
Overall	Irregular noise, vibration

8.3 Internal visual inspection

Turn the power OFF. Remove the screw cover and inspect inside visually.
When inspecting the interior, check the following items.

Main unit	Loose actuator mounting bolts, other loose items
Guide	Condition of lubricant, dirt, dust and foreign substance
Ball Screw	Condition of lubricant, dirt, dust and foreign substance

8.4 Cleaning

- Clean exterior surfaces as necessary.
- Wipe off water and chemical on the surface of the main unit as much as possible after use as they could influence the product life and performance.
- Use a soft cloth to wipe away dirt and buildup.
- Do not use oil–based solvents as they can harm lacquered and painted surfaces.
- To remove severe buildup, wipe gently with a soft cloth soaked in a neutral detergent or alcohol.

8.5 Grease Supply

8.5.1 Grease to Apply

IAI uses the following grease in our plant. Also, the grease to be used should be the same regardless of parts.

Idemitsu Kosan	Daphne Eponex Grease No. 2

Apart from above, there are equivalent sorts of grease sold in the market. For detail, ask your supplier to recommend the equivalent by instructing the name of the grease above.

Here are some examples of similar products.

Showa Shell Oil	Albania Grease No. 2
Mobil Oil	Mobilux 2

⚠ Warning: Never use any fluorine-based grease. Mixing with lithium-based grease with other grease not only reduces the performance of the grease, it may even cause damage to the actuator.

8.5.2 Period of Time to Supply Grease

1. It shows the reference of the period of time to supply grease on the ball screws and linear guides in the X, Y and Z axes in the table below.
   For the R-axis, supply grease in every 6 monthes.

Max. Speed mm/sec	Grease Supply Period	
	Operation distance	Number of Months
Over 0, At and Below 750	1,250km	12 months
Over 750, At and Below 1500	2,500km	
Over 1500, At and Below 2500	5,000km	

2. Max. Speed shows the velocity described in the catalog.
3. The period of time to supply grease can be referenced the same even if the use is not in the maximum speed.
4. The period of time to supply grease should prior the one reached earlier from the operation distance and the number of months.
5. Apart from the period of time indicated above, supply grease once in 3 months after the start of first operation after delivery.
6. In case of stored for a long period of time (6 months or more), the grease may have got degraded. Supply grease again before use.
7. Regular Inspection: Check the condition of the grease in every 6 months (internal inspection), and supply it if it is confirmed that the grease is significantly dirty or is dried up.
8. If significant dirt is found, wipe it up before supplying grease.
   After supplying grease, move the slider back and forth in the stroke range so the grease can be spread evenly.
9. Confirm that there is gloss of the grease oil on the surface of ball driving area on the ball screw and linear guide.
   Supply grease again in case it is not spread to the whole area.
10. After supplying grease, wipe off the excess grease.
    Too much grease may increase the sliding resistance and thus increase load to the motor.
    Also, excess grease on the ball screw may splash and dirt the surroundings.
11. In case the grease got into your eye, immediately go see the doctor to get appropriate care.
    After finishing the grease supply work, wash your hands carefully with water and soap to rinse the grease off.

12. The degradation speed of the grease will significantly differ depending on the environment of use (temperature, humidity and surrounding atmosphere).
    In case of usage in bad environment such as in high temperature, high humidity or in an atmosphere with heavy dust in the air, it is recommended to have grease supply in short period.
13. Also, in usage in bad environment, if the grease gets significantly dirty, it is recommended to improve the environment.

8.5.3 How to supply the grease

Supply grease from the supply inlet.

1. Detach the grommet.
2. Move the slider until the grease nipple on the slider can be seen in the supply inlet.
3. Put the grease gun into the grease supply inlet and supply grease on the grease nipple.
   * Supplying grease to this grease nipple will grease up both ball screw and guide.
4. Move the slider back and forth with hand for several times.

Refer to the following pages for detail.

Procedures to Supply Grease on X, Y and Z Axes

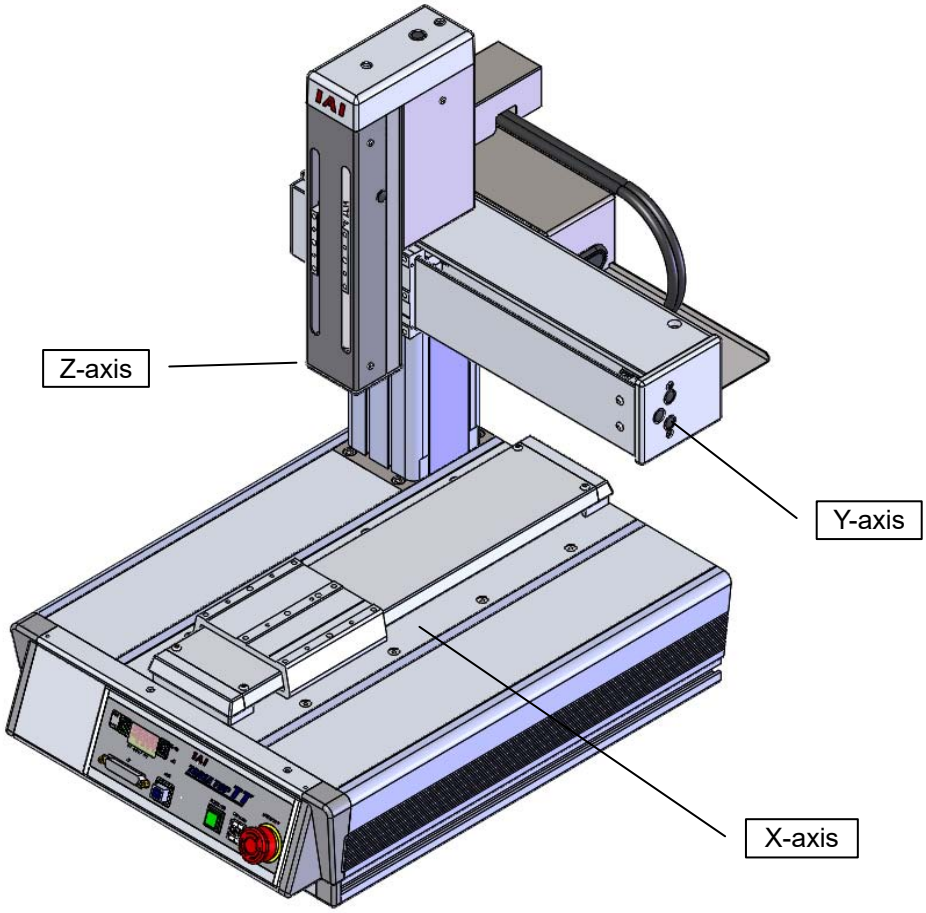

In this section, explains how to supply grease to each axis.
In this instruction, explanation is conducted using A Type 3-Axis Pulse Motor 200 Stroke Type (Model Code: TTA-A3-20-20).

<Required Tool>

- Grease Gun
  (Applicable for diameter ϕ3.5 grease nipple hole, nozzle outer diameter 7.5mm or below, nozzle length 70mm or more)

*: The procedures to supply grease are in common for all the sizes.
*: For C Type, the structure of the X-axis differs from A Type. Refer to procedures for grease supply on the Y-axis of A Type for how to supply grease to X-axis of C Type.

X-Axis

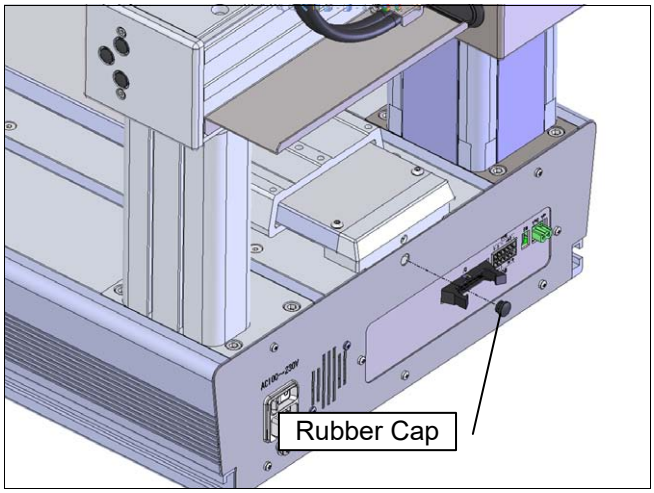

[X-axis Step (1)]
Take out the rubber cap on the back of the TTA main unit.

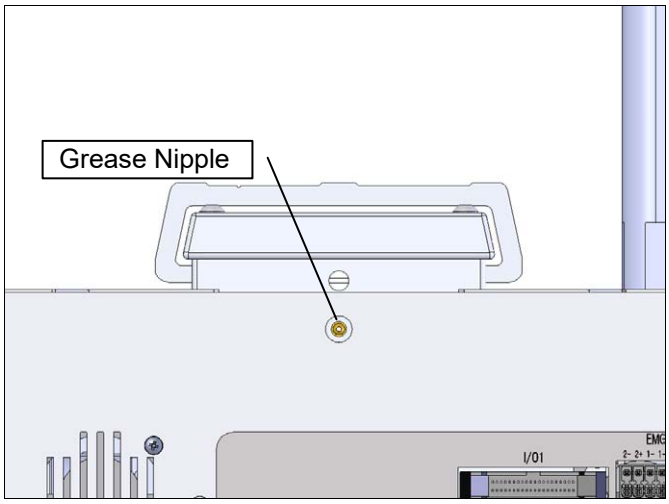

[X-axis Step (2)]
Confirm the grease nipple on the X-axis slider.
Supplying grease to this grease nipple will grease up both guide and ball screw.

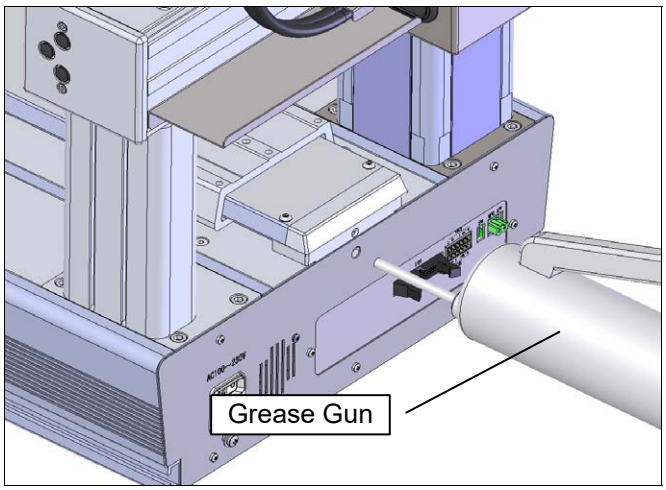

[X-axis Step (3)]
Move the slider on the X-axis to the stroke end and supply grease with using a grease gun.

[Tool: Grease gun]

<Caution>
During supplying grease, hold the slider or turn the servo on so the slider will not move.

Y-Axis

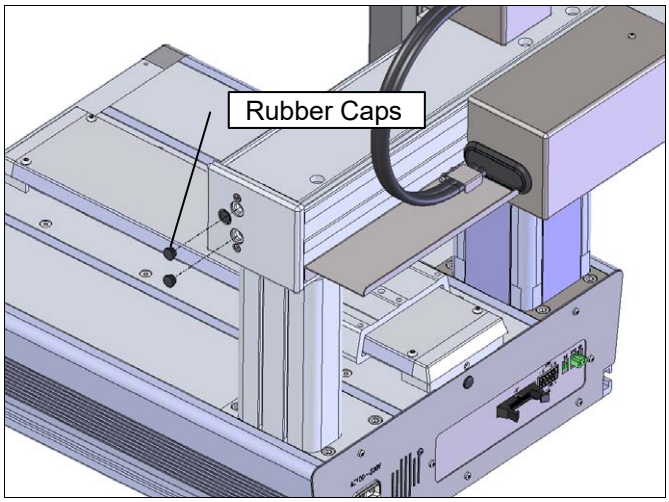

[Y-axis Step (1)]
Take out the rubber caps at the positions on Y-axis front cover.

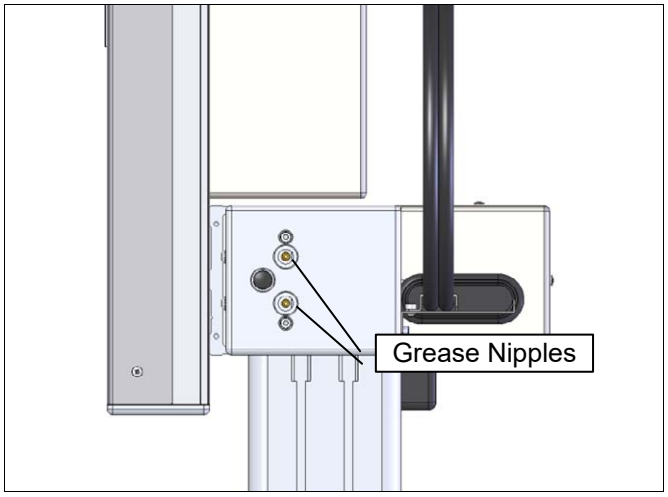

[Y-axis Step (2)]
Confirm the grease nipples on the Y-axis slider.
Supplying grease to the top grease nipple will grease up the top guide and ball screw while supplying grease to the bottom grease nipple will grease up the bottom guide and ball screw.

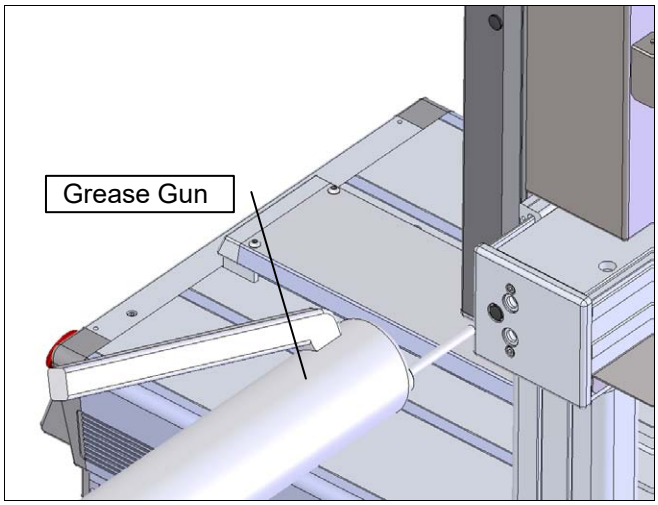

[Y-axis Step (3)]
Move the slider on the Y-axis to the stroke end and supply grease with using a grease gun.

[Tool: Grease gun]

<Caution>
During supplying grease, hold the slider or turn the servo on so the slider will not move.

Z-Axis

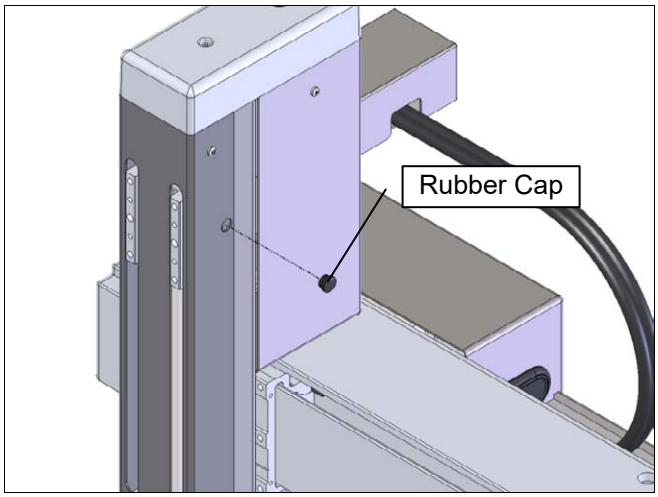

[Z-axis Step (1)]
View the Z-axis from the front, and take out the rubber cap on the right.

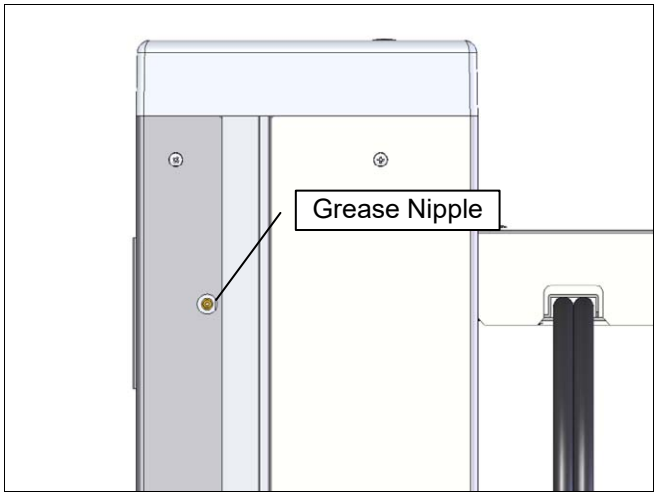

[Z-axis Step (2)]
Confirm the grease nipple on the right side of the Z-axis slider. Grease should be supplied to the guide and ball screw on the right side.

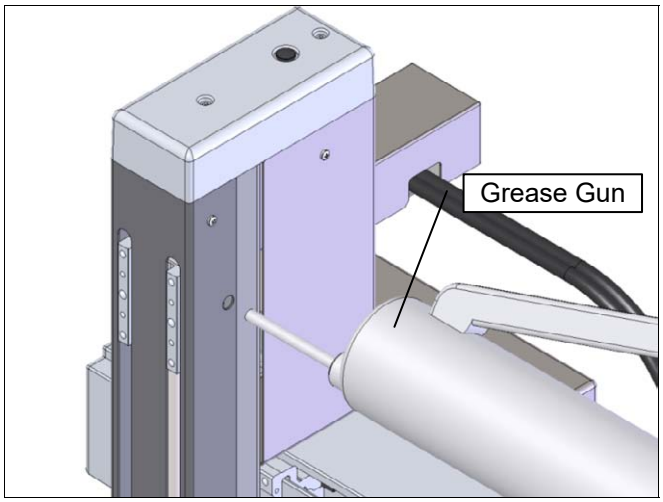

[Z-axis Step (3)]
Move the slider on the Z-axis to the home-position, and supply grease with using a grease gun.

[Tool: Grease gun]

<Caution>
During supplying grease, hold the Z-axis or turn the servo on so the Z-axis will not move.

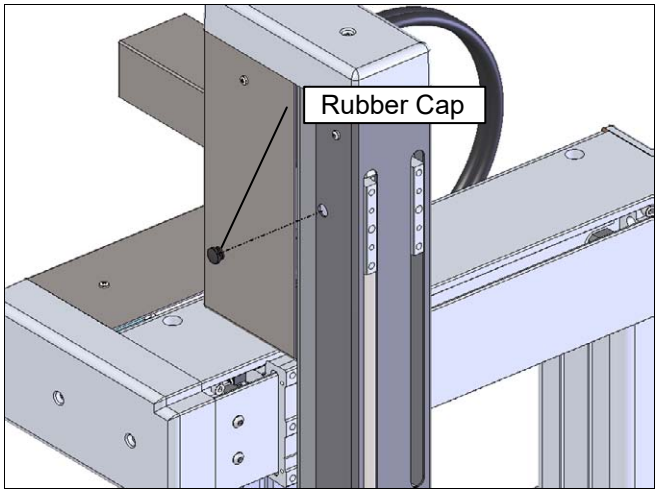

[Z-axis Step (4)]
View the Z-axis from the front, and take out the rubber cap on the left.

[Z-axis Step (5)]
Confirm the grease nipple on the left side of the Z-axis slider.
Grease should be supplied to the guide and ball screw on the left side.

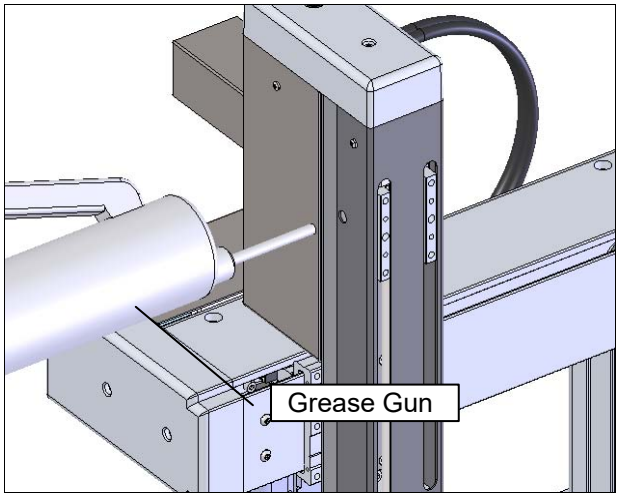

[Z-axis Step (6)]
Move the slider on the Z-axis to the home-position, and supply grease with using a grease gun.

[Tool: Grease gun]

<Caution>
During supplying grease, hold the Z-axis or turn the servo on so the Z-axis will not move.

Procedures to Supply Grease on ZR Axis

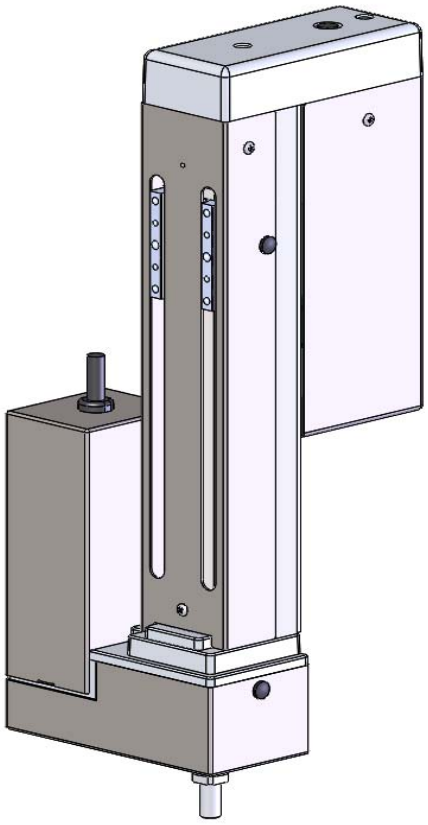

Described below, shows the procedures to supply grease to the ZR-axis in TTA.

<Required Tool>

- Grease Gun
  (Applicable for diameter ϕ3.5 grease nipple hole, nozzle outer diameter 7.5mm or below, nozzle length 70mm or more)

R-Axis

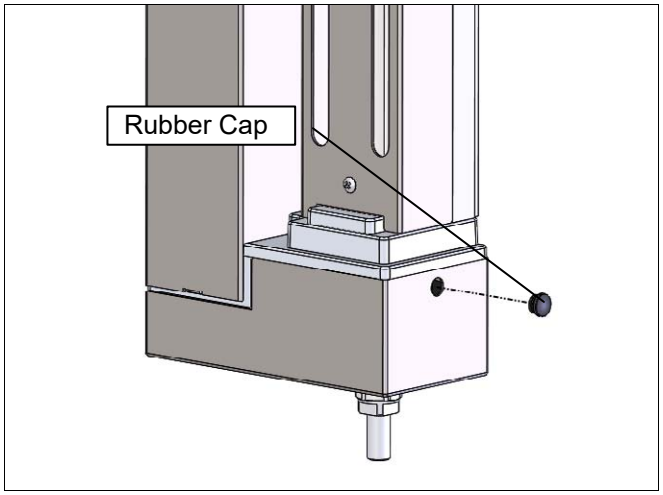

[R-axis Step (1)]
Take out the rubber cap on the bottom of the side of the ZR-axis.

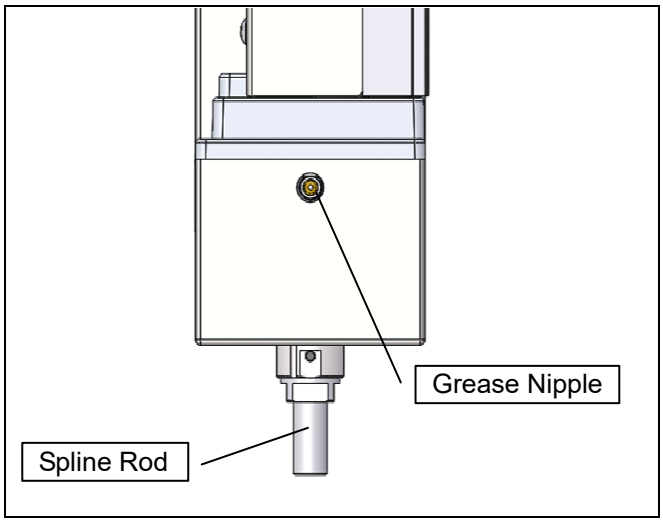

[R-axis Step (2)]
Confirm the grease nipple while the R-axis is at the home-position (Position 0).
Supplying grease to this grease nipple will grease up the spline rod.

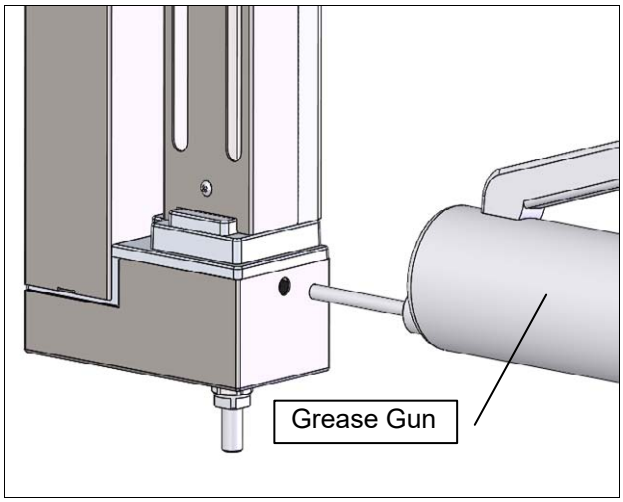

[R-axis Step (3)]
Supply grease with using a grease gun while the R-axis is at home-positon (Position 0).

[Tool: Grease gun]

<Caution>
During supplying grease, hold the ZR-axis or turn the servo on so the ZR-axis will not move.

8.6 Replacement of Timing Belt

8.6.1 Inspecting the Belt

Remove the pulley cover and visually inspect the belt.
Durability of the timing belt is affected significantly by the operating condition, and there is no standard guideline as to when the belt should be replaced. Generally, the belt is designed to withstand several millions of flexing loads.
It should be 2,500-hour or 2,500km for reference.
Also, proceed to replace the belt if any of the following is confirmed in the regular inspection.

- When the gear and belt area show obvious friction.
- When swelling occurs as a result of oil adhesion.
- When damages such as a crack occurs on the belt gear and back side.
- When the belt breaks.

If the belt needs to be replaced, please contact IAI.

8.6.2 Applicable Belt

The Tabletop Robot uses the following timing belt for its actuators. Should you require replacement of any belt used in your robot, please contact IAI.

Timing belt
X axis: S3M; 10-mm wide, 243-mm long (Manufacturer: Bando Chemical Industries).
Y axis: S3M; 10-mm wide, 318-mm long (Manufacturer: Bando Chemical Industries).
Z axis: S3M; 6-mm wide, 243-mm long (Manufacturer: Bando Chemical Industries).

Procedures to Replace Belt on X, Y and Z Axes

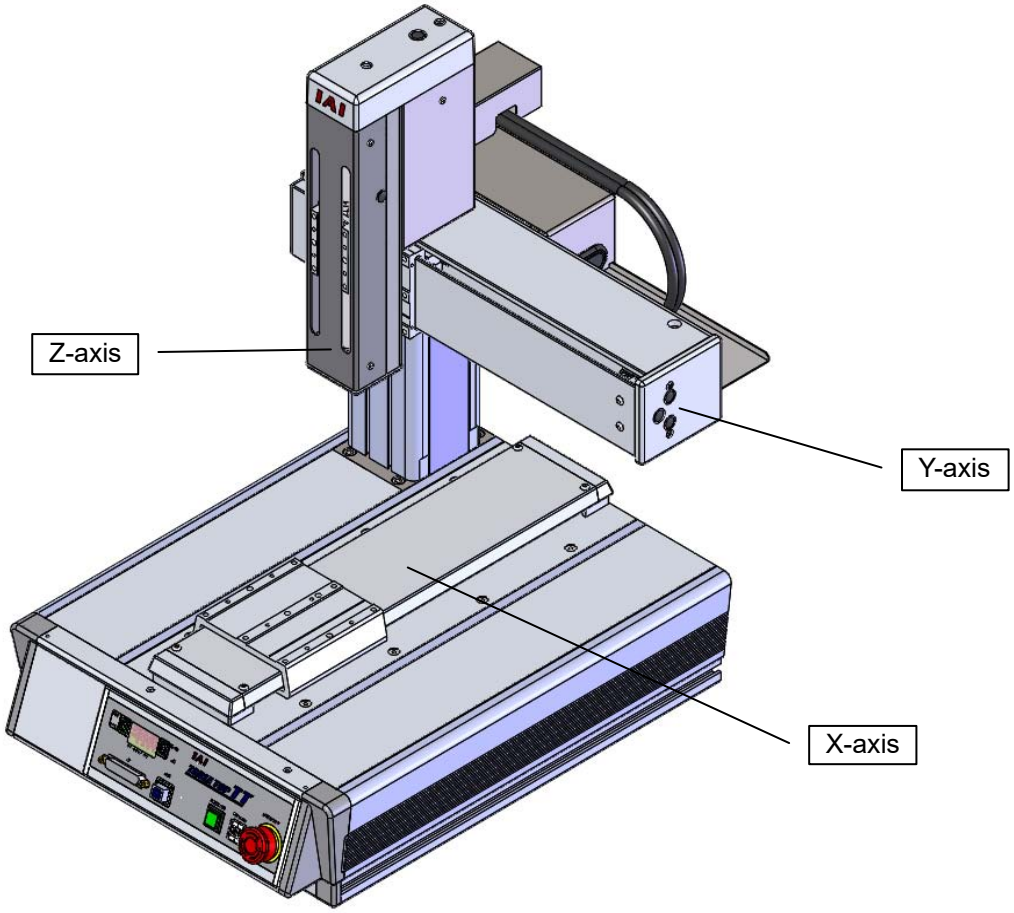

In this section, explains how to replace the belt on each axis.
In this instruction, explanation is conducted using A Type 3-Axis Pluse Motor 200 Stroke Type (Model Code: TTA-A3-20-20).

<Required Tools/Measurement Equipment>

- Hexagon Wrench
- Phillips screwdriver
- Sonic Belt Tension Meter (Model Code: U-508)
- Spring Scale (Tension 58N or more)
- Cable Bands

*: The procedures to replace the belt are in common for all the sizes.
*: For C Type, the structure of the X-axis differs from A Type. Refer to procedures to replace the belt on the Y-axis of A Type for how to replace the belt on X-axis of C Type.
*: Refer to the separate document “Procedures to Replace Belt on ZR-Axis in TTA” for the ZR-axis.

X-Axis

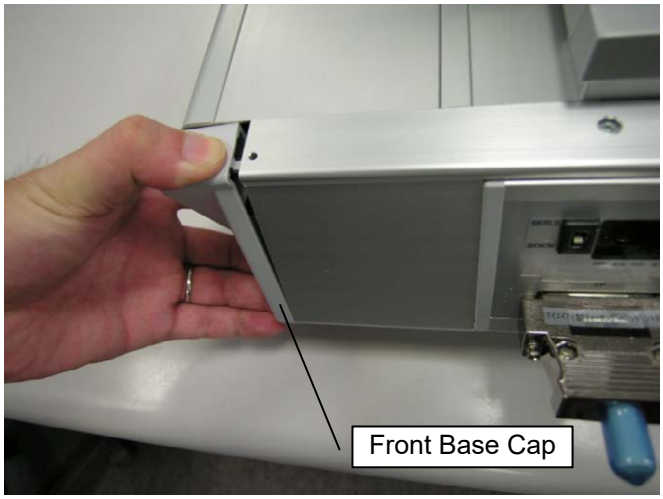

[X-axis Step (1)]
Take off the front base cap (on the right and left).
Hold the top and get rid of the pin for drop prevention and take the cap off.

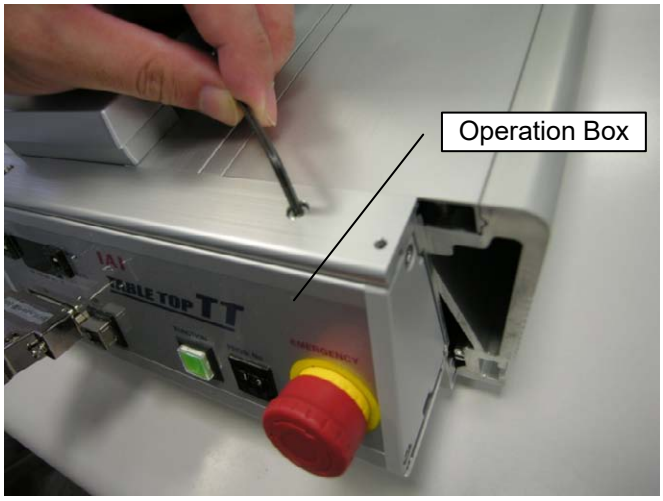

[X-axis Step (2)]
Take off the operation box.
Remove the two screws on the top.

[Tool: Hexagon wrench]

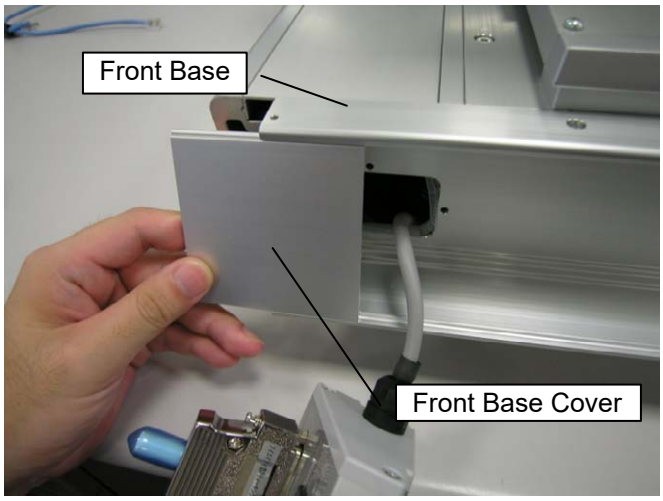

[X-axis Step (3)]
Pull the front base cover out of the front base.

<Caution>
If the cover is difficult to pull out, hold the bottom of the front base to make the gap larger.

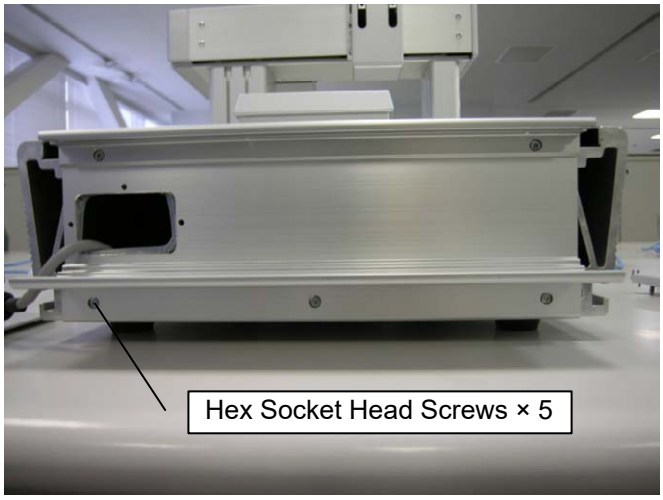

[X-axis Step (4)]
Take off the front base.
Remove the five screws on the front. (The number of screws differ depending on the TTA size.)

[Tool: Hexagon wrench]

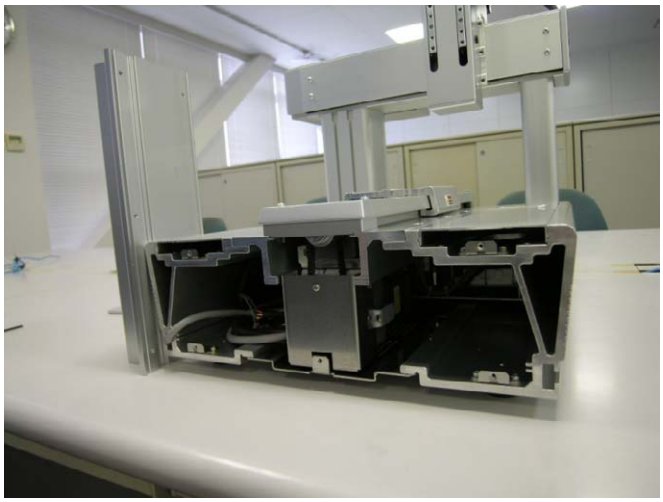

[X-axis Step (5)]
Cables of the operation box go through in the front base. Move the front base to the side of the main unit to avoid unnecessary load to the cables.



[X-axis Step (6)]
Take off Pulley Cover X.
Remove the screw on the front.

[Tool: Phillips screwdriver]

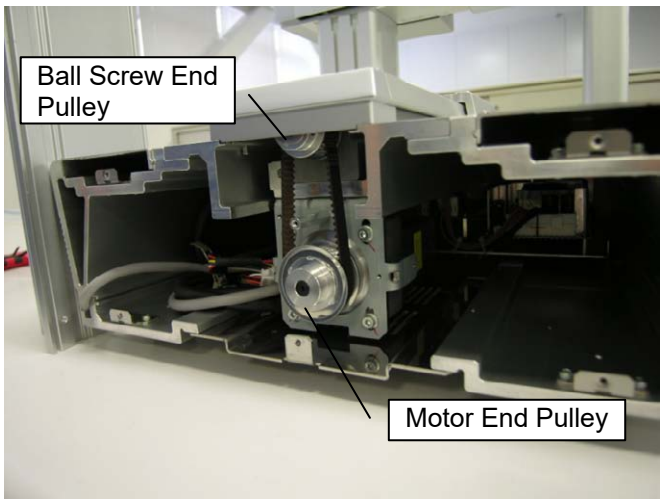

[X-axis Step (7)]
Although you can access to the pulley in the motor end in this condition, you will not be able to take the belt off the pulley on the ball screw end.



[X-axis Step (8)]
Take off the screw cover bracket (only on front side).
Remove the two screws on the top.

[Tool: Hexagon wrench]



[X-axis Step (9)]
After removing the screws, pull the bracket to the front direction.



[X-axis Step (10)]
Now, it is accessible to both pulleys.

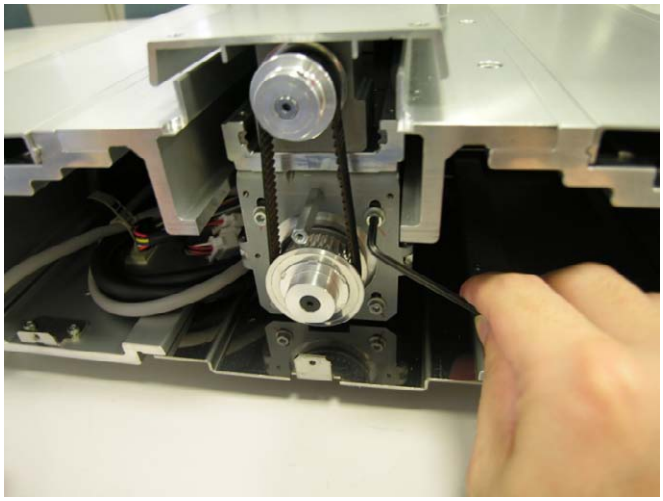

[X-axis Step (11)]
Remove the motor fixture and loosen the timing belt.
Remove the four screws on the front.

[Tool: Hexagon wrench]

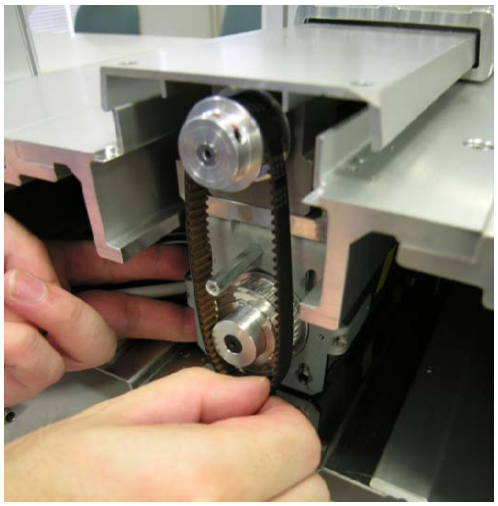

[X-axis Step (12)]
Push up the motor to loosen the timing belt, and take the timing belt off.

[X-axis Step (13)]
Attach a timing belt for replacement in the same procedures.

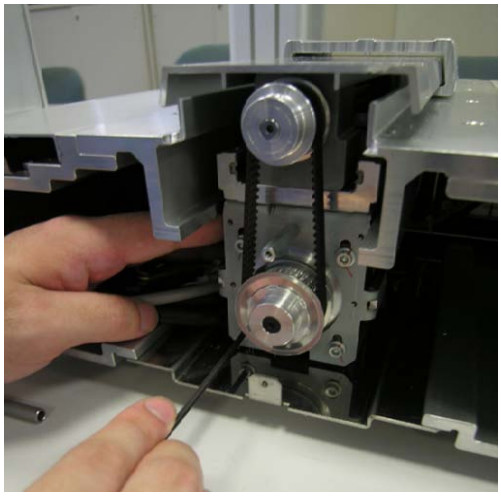

[X-axis Step (14)]
Affix the motor while tension being applied to the belt.

[Tool: Hexagon wrench]

<Caution>
As there is not enough working space, it is not possible to apply tension to the belt with using such a tool as a spring scale. Hold the motor with hand, apply tension to the belt, and then affix the motor.

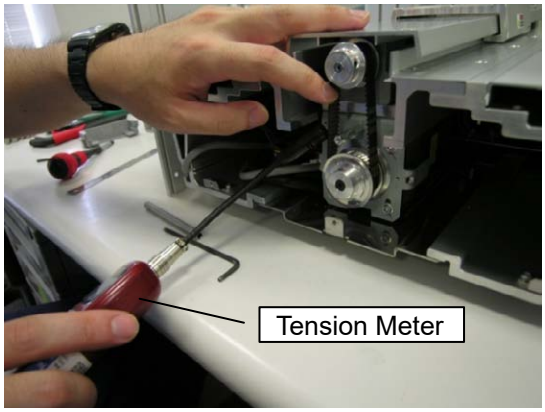

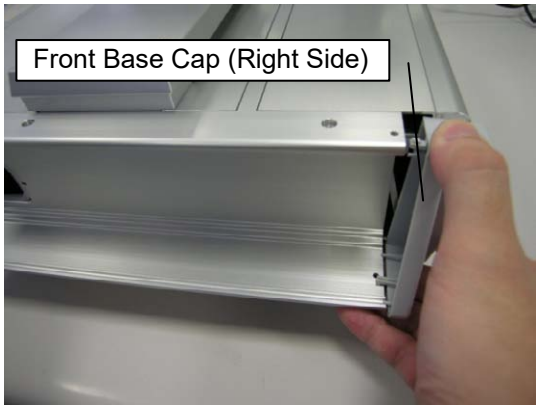

[X-axis Step (15)]
Check the belt tension with using a sonic belt tension meter.
Tension to Pass: Refer to documents described in Pg. 279 to 280
Refer to “Appendix” for how to set up the sonic belt tension meter.

[Measurement Equipment: Sonic belt tension meter]

[X-axis Step (16)]
Assemble back each component in the back order of the porocedures.
Attach the front base cap (right) before putting on the operation box.

[Tools: Hexagon wrench, Phillips screwdriver]

Y-Axis

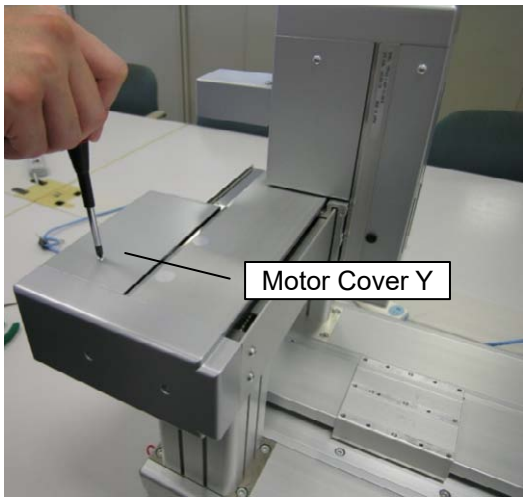

[Y-axis Step (1)]
Take off Motor Cover Y.
Remove the three screws on the top and bottom of the back side.

[Tool: Phillips screwdriver]

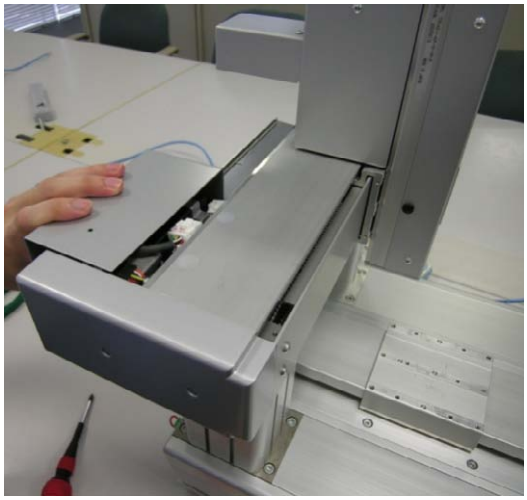

[Y-axis Step (2)]
Pull out Motor Cover Y to the rear direction.

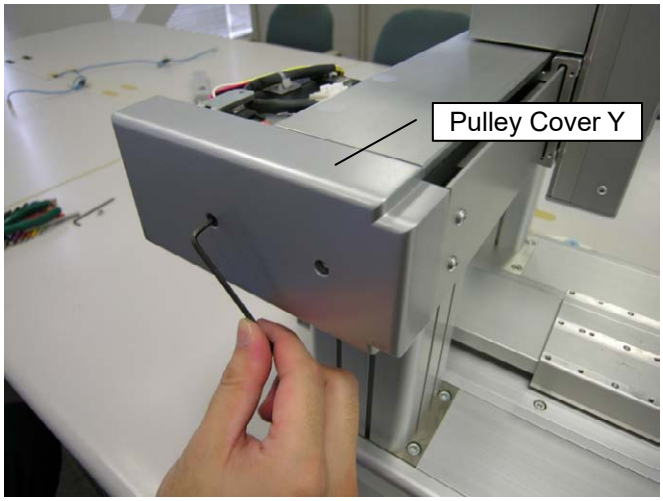

[Y-axis Step (3)]
Take off Pulley Cover Y.
Remove the two screws on the side.

[Tool: Hexagon wrench]

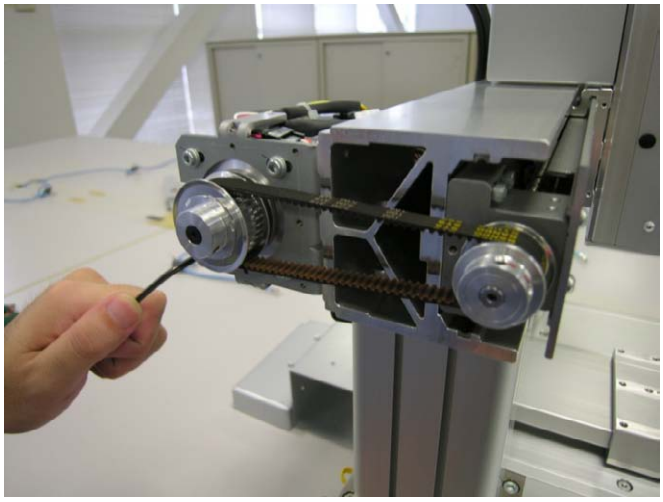

[Y-axis Step (4)]
Remove the motor fixture and loosen the timing belt.
Remove the four screws on the side.

[Tool: Hexagon wrench]

<Caution>
Hold the motor while in work as it will drop after the screws were removed.

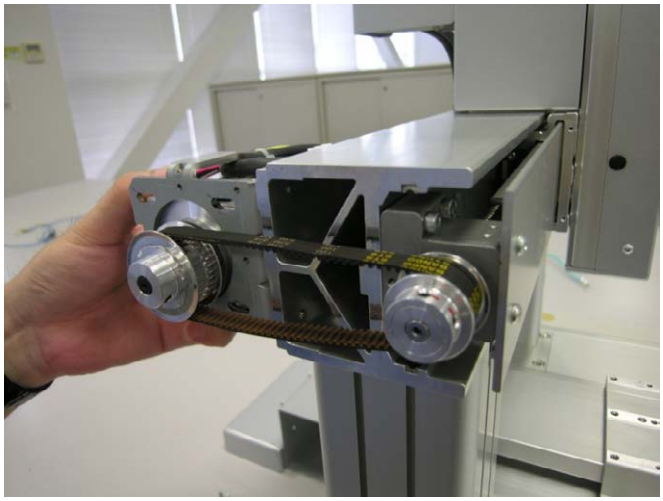

[Y-axis Step (5)]
Loosen the timing belt and take it off.

[Y-axis Step (6)]
Attach a timing belt for replacement in the same procedures.

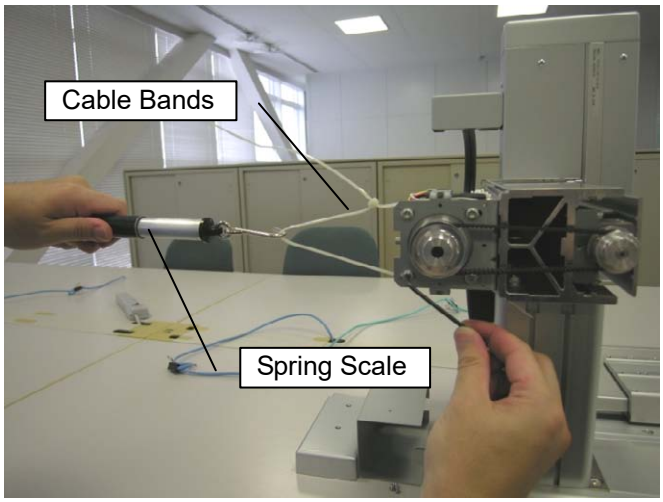

[Y-axis Step (7)]
Affix the motor while tension being applied to the belt.
(Pull the motor part with using such thing as cable bands. Apply force in parallel direction to the timing belt.)
Tension: Refer to documents described in Pg. 279 to 280

[Measurement equipment: Spring scale]

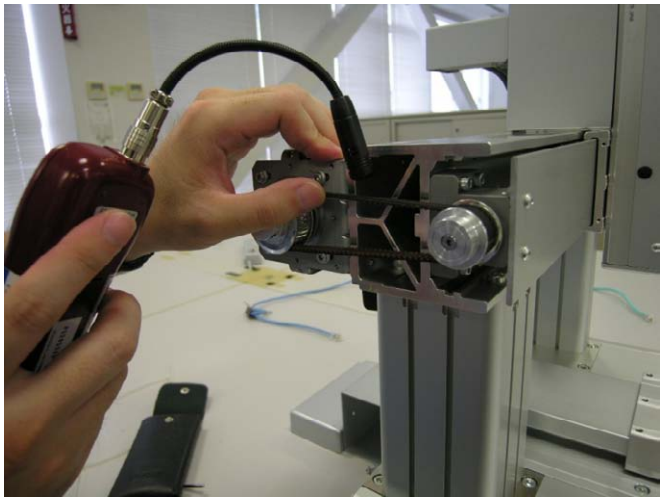

[Y-axis Step (8)]
Check the belt tention.
Tension to Pass: Refer to documents described in Pg. 279 to 280
[Measurement equipment:
Sonic belt tension meter]

<Caution>
The belt tension will be reduced to the half of the tension applied at installation.

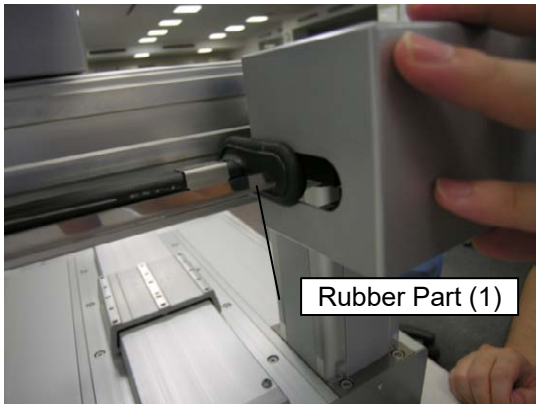

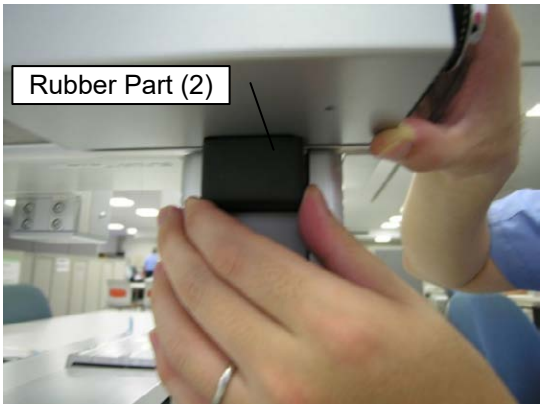

[Y-axis Step (9)]
Assemble back each component in the back order of the procedures.
When installing Motor Cover Y, pay attention to the slits on “Rubber Part (1)” and “Rubber Part (2)” so Motor Cover Y will be hanged on them. Also, pay attention not to pinch the cables when installing Motor Cover Y.

[Tools: Hexagon wrench, Phillips screwdriver]

Z-Axis

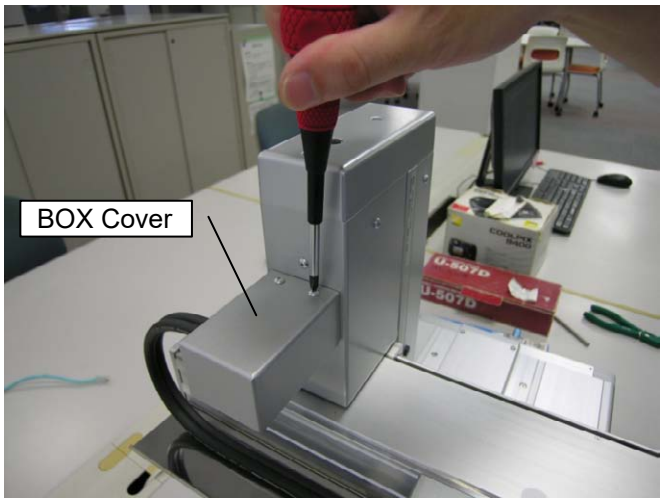

[Z-axis Step (1)]
Take off BOX Cover.
Remove the two screws on the top.

[Tool: Phillips screwdriver]

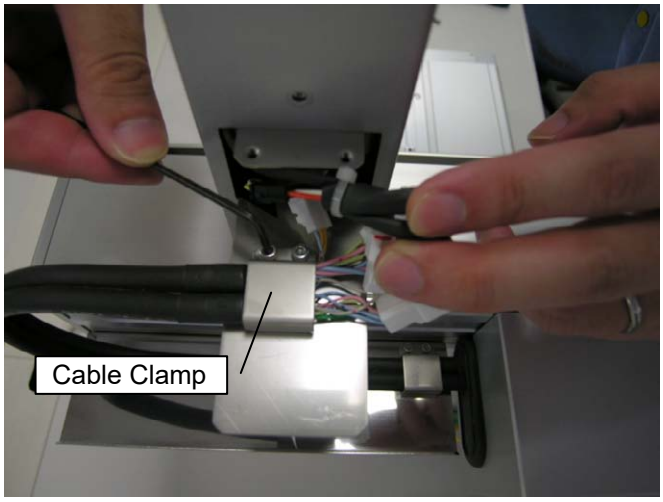

[Z-axis Step (2)]
Remove the cable clamp.
Remove the two screws on the top.

[Tool: Hexagon wrench]



[Z-axis Step (3)]
Take off Motor Cover Z.
Remove the three screws on the right and left sides and the back side.

[Tool: Phillips screwdriver]

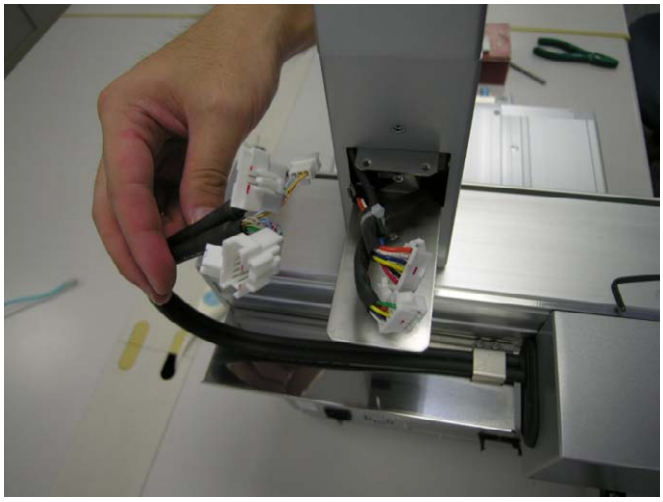

[Z-axis Step (4)]
Detach the cable connectors.

<Caution>
For the three-axis type, there is not concern of wrong wiring as the connectors match with each mating end, but for the four-axis type, there is a concern of wrong connection. Apply markings before detaching in order to avoid wrong wiring.

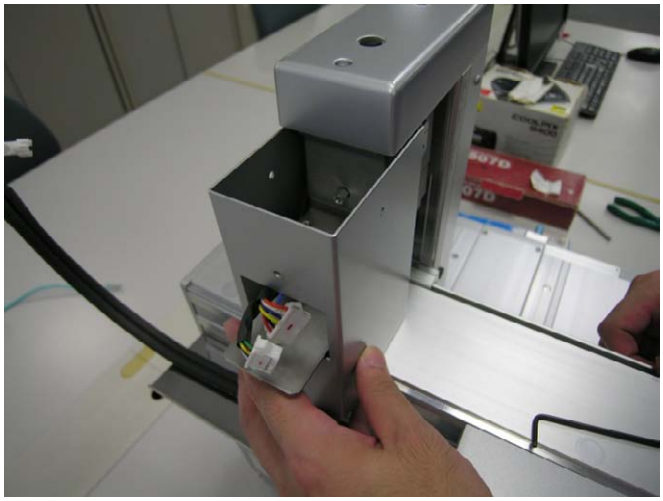

[Z-axis Step (5)]
Pull out Motor Cover Z to the rear direction.

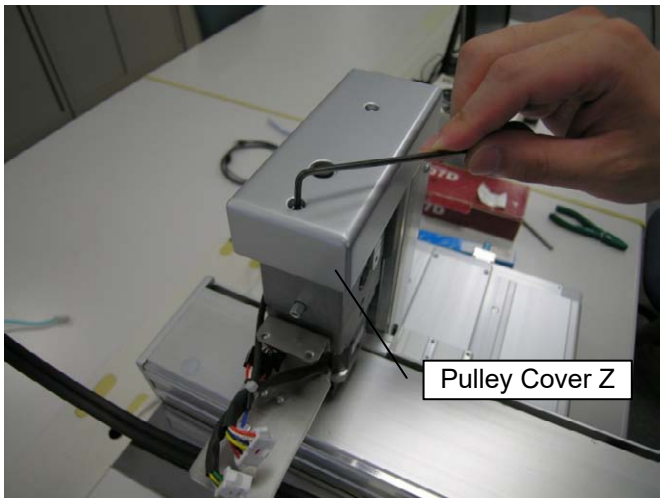

[Z-axis Step (6)]
Take off Pulley Cover Z.
Remove the two screws on the top.

[Tool: Hexagon wrench]

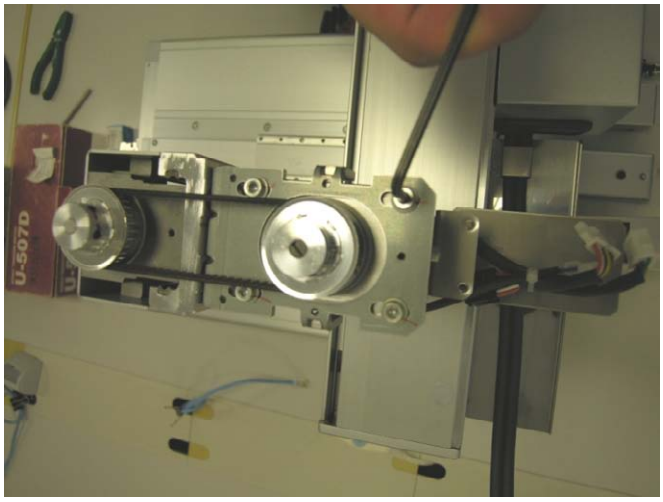

[Z-axis Step (7)]
Remove the motor fixture and loosen the timing belt.
Remove the four screws on the top.

[Tool: Hexagon wrench]

<Caution>
Hold the motor while in work as it will drop after the screws were removed.

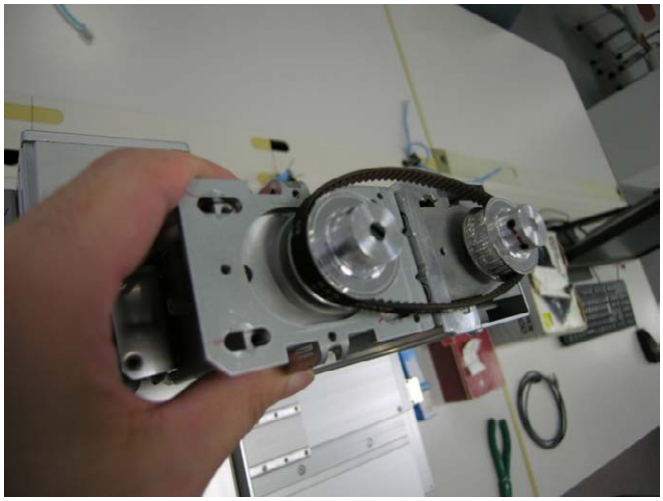

[Z-axis Step (8)]
Loosen the timing belt and take it off.

[Z-axis Step (9)]
Attach a timing belt for replacement in the same procedures.

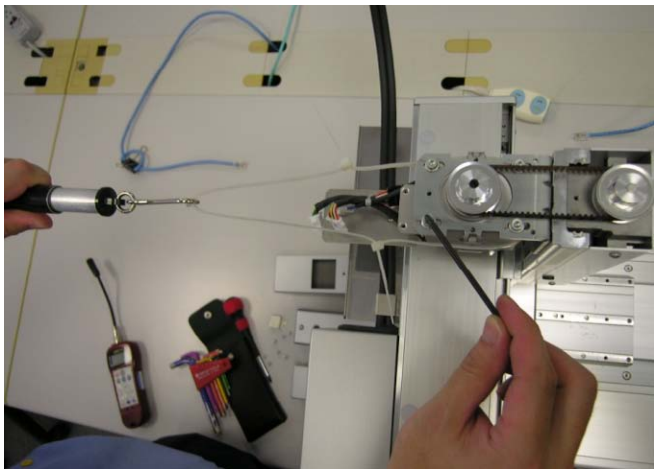

[Z-axis Step (10)]
Affix the motor while tension being applied to the belt.
(Pull the motor part with using such thing as cable bands. Apply force in parallel direction to the timing belt.)
Tension: Refer to documents described in Pg. 279 to 280

[Measurement equipment: Spring scale]



[Z-axis Step (11)]
Check the belt tension.
Tension to Pass: Refer to documents described in Pg. 279 to 280

[Measurement equipment:
Sonic belt tension meter]

[Z-axis Step (12)]
Assemble back each component in the back order of the procedures.
Pay attention not to pinch the cables when installing Motor Cover Z and BOX Cover.

[Tools: Hexagon wrench, Phillips screwdriver]

Document: Belt Tension / Tension to Pass and How to Set up Sonic Belt Tension Meter (X/Y/Z Axes)

<<Latest>>

A Type

- Pluse Motor Incremental Type / Pulse Motor Specifications Battery-less Absolute Type

[X-Axis]
Belt Code : 243-3GT-6
Tension : 58N Tension to Pass: 29N (±5N)
Tension Meter Setting: M = 2.5 W = 6 S = 77

[Y-Axis]
Belt Code : 318-3GT-6
Tension : 58N Tension to Pass: 29N (±5N)
Tension Meter Setting: M = 2.5 W = 6 S = 115

[Z-Axis]
Belt Code : 244-2GT-6
Tension : 32N Tension to Pass: 16N (±5N)
Tension Meter Setting: M = 1.3 W = 6 S = 80

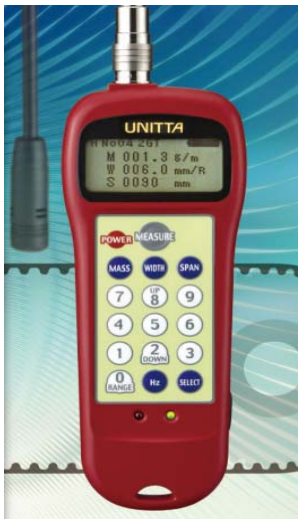

- AC Servo Motor Battery-less Absolute Type

[X-Axis]
Belt Code : 225-3GT-6
Tension : 58N Tension to Pass: 29N (±5N)
Tension Meter Setting: M = 2.5 W = 6 S = 77

[Y-Axis]
Belt Code : 300-3GT-6
Tension : 58N Tension to Pass: 29N (±5N)
Tension Meter Setting: M = 2.5 W = 6 S = 115

[Z-Axis]
Belt Code : 232-2GT-6 (Low Lead Specifications) 226-2GT-6 (High Lead Specifications)
Tension : 32N Tension to Pass: 16N (±5N)
Tension Meter Setting: M = 1.3 W = 6 S = 80
(Althogh the belt to use will differ for each lead, the tension and setting of tension meter will be the same.)

C Type

● Pulse Motor Incremental Type / Pulse Motor Specifications Battery-less Absolute Type

[X-Axis]
Belt Code : 318-3GT-6
Tension : 58N Tension to Pass: 29N (±5N)
Tension Meter Setting: M = 2.5 W = 6 S = 77

[Y-Axis]
Belt Code : 318-3GT-6
Tension : 58N Tension to Pass: 29N (±5N)
Tension Meter Setting: M = 2.5 W = 6 S = 115
[Z-Axis]
Belt Code : 244-2GT-6
Tension : 32N Tension to Pass: 16N (±5N)
Tension Meter Setting: M = 1.3 W = 6 S = 80

● AC Servo Motor Battery-less Absolute Type

[X-Axis]
Belt Code : 300-3GT-6 (Low Lead Specifications) 297-3GT-6 (High Lead Specifications)
Tension : 58N Tension to Pass: 29N (±5N)
Tension Meter Setting: M = 2.5 W = 6 S = 77
(Althogh the belt to use will differ for each lead, the tension and setting of tension meter will be the same.)

[Y-Axis]
Belt Code : 300-3GT-6 (Low Lead Specifications) 297-3GT-6 (High Lead Specifications)
Tension : 58N Tension to Pass: 29N (±5N)
Tension Meter Setting: M = 2.5 W = 6 S = 115
(Althogh the belt to use will differ for each lead, the tension and setting of tension meter will be the same.)

[Z-Axis]
Belt Code : 232-2GT-6 (Low Lead Specifications) 226-2GT-6 (High Lead Specifications)
Tension : 32N Tension to Pass: 16N (±5N)
Tension Meter Setting: M = 1.3 W = 6 S = 80
(Althogh the belt to use will differ for each lead, the tension and setting of tension meter will be the same.)

Procedures to Replace Belt on ZR Axis

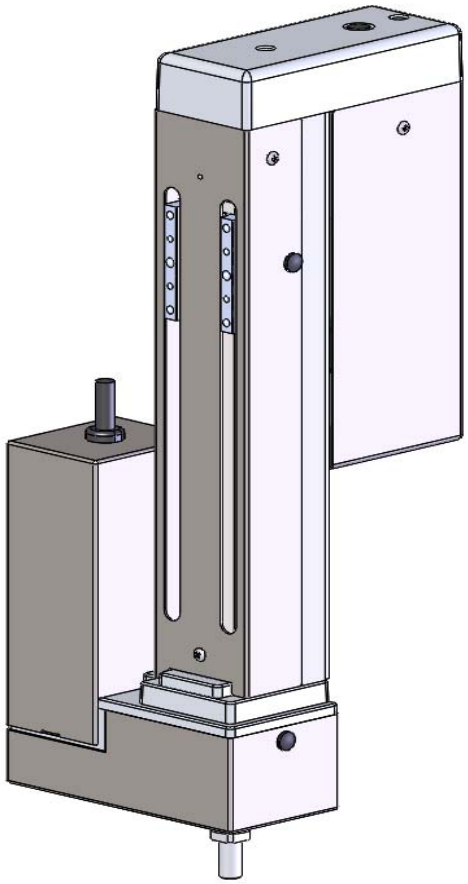

Described below, shows the procedures to replace the R-axis belt on the ZR-axis in TTA.
Refer to “Procedures to Replace Belt in TTA” for the Z-axis.

<Required Tools/Measurement Equipment>

- Hexagon Wrench
- Phillips screwdriver
- Sonic Belt Tension Meter (Model Code: U-508)
- Spring Scale (Tension 58N or more)
- Cable Bands

R-Axis

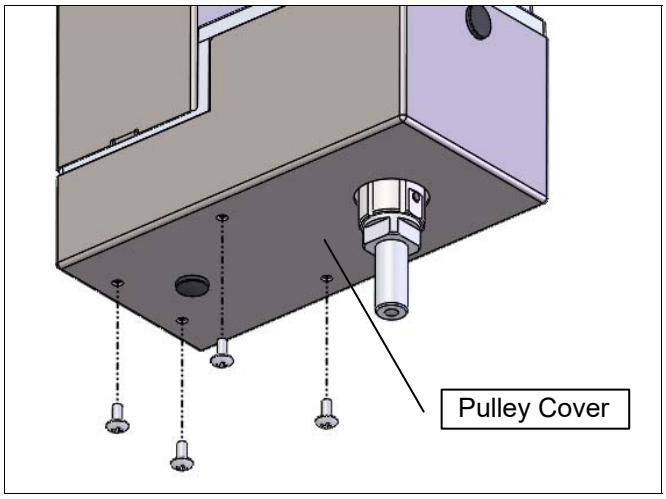

[R-axis Step (1)]
Take off the pulley cover.
Remove the four screws on the bottom side.

[Tool: Phillips screwdriver]

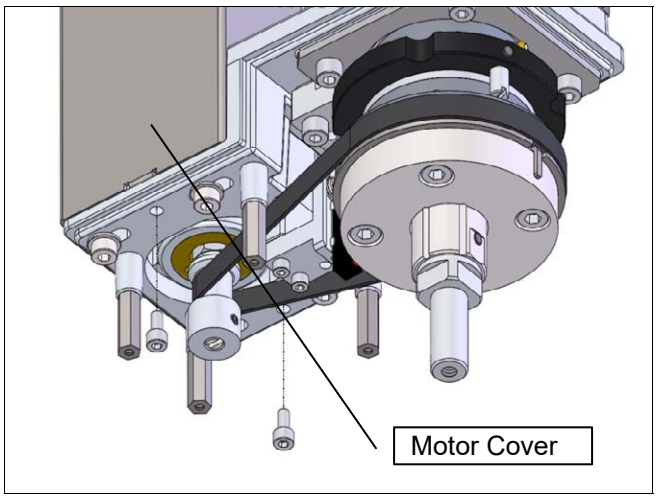

[R-axis Step (2)]
Detach the fixture of the motor cover.
Remove the two screws on the bottom side.

[Tool: Hexagon wrench]

<Caution>
In this process, the motor cover is not to be taken off. Remove only the two screws holding the motor cover.

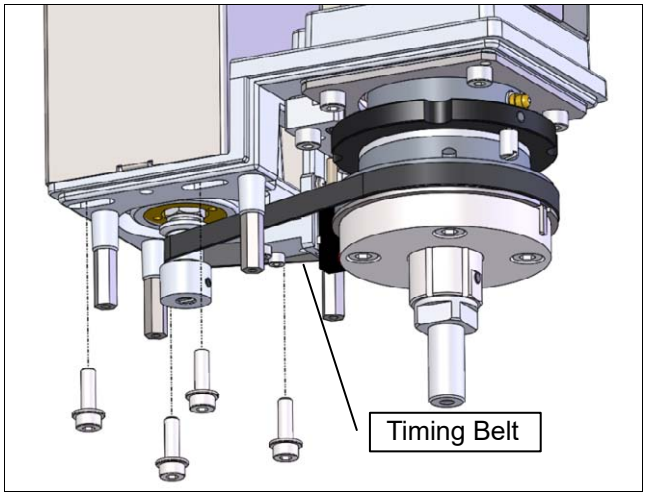

[R-axis Step (3)]
Remove the motor fixture and loosen the timing belt.
Remove the four screws on the bottom side.

[Tool: Hexagon wrench]

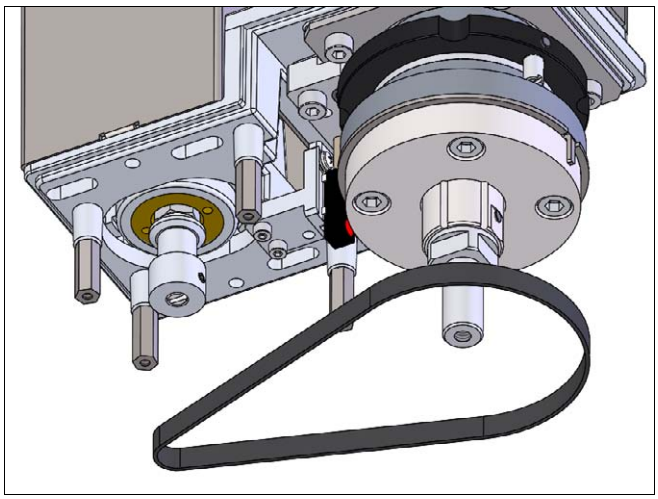

[R-axis Step (4)]
Loosen the timing belt and take it off.

[R-axis Step (5)]
Attach a timing belt for replacement in the same procedures.

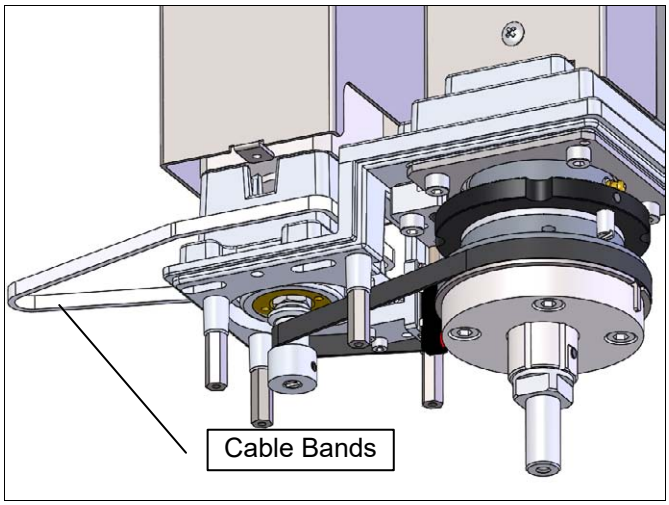

[R-axis Step (6)]
Put a cable band around the motor part.
(As the cable attached on the motor cover is joined to the motor, the motor cover will not be able to be taken off. Pull up the motor cover to get enough space to put a cable band around.)

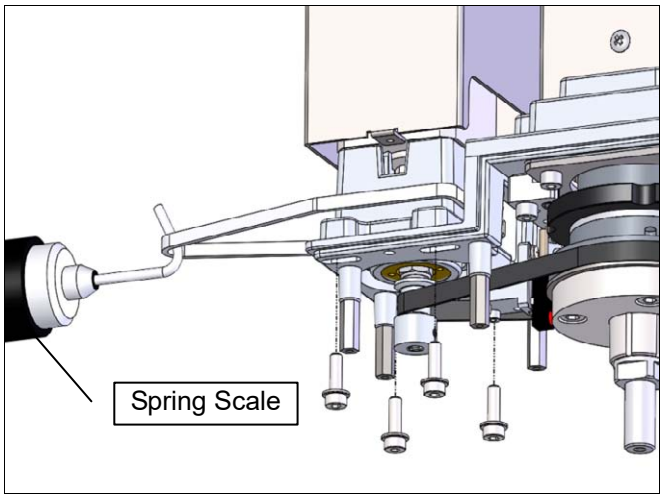

[R-axis Step (7)]
Affix the motor while tension being applied to the belt.
(Hang a spring scale on the cable band, and pull the motor part. Apply force in parallel direction to the timing belt.)
Tension: Refer to document
described in Pg. 284

[Measurement equipment:
Spring scale]

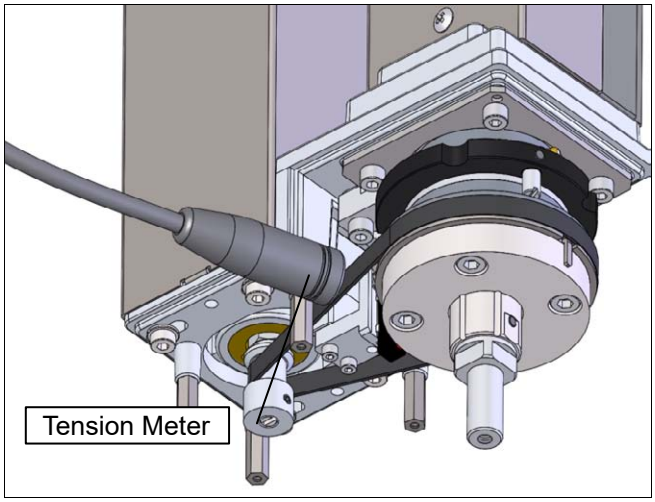

[R-axis Step (8)]
Check the belt tension.
Set a tension meter close to the belt, and flick the belt with finger to check the tension.
Tension to Pass: Refer to document described in Pg. 284
[Measurement equipment:
Sonic tension belt meter]

<Caution>
The belt tension will be reduced to the half of the tension applied at installation.

[R-axis Step (9)]
Assemble back each component in the back order of the procedures.

[Tools: Hexagon wrench, Phillips screwdriver]

Document: Belt Tension / Tension to Pass and How to Set up Sonic Belt Tension Meter (ZR Axis)

● Pulse Motor Incremental Type
Belt Code : 276-3GT-6
Tension : 58N Tension to Pass: 29N (±5N)
Tension Meter Setting: M = 2.5 W = 6 S = 80

● Pulse Motor Battery-less Absolute Type / AC Servo Motor Battery-less Absolute Type
Belt Code : 280-2GT-6
Tension : 32N Tension to Pass: 16N (±5N)
Tension Meter Setting: M = 1.3 W = 6 S = 80



8.7 Period of Time for Fan Unit Replacement

It is recommended to replace the fan in approximately three years assuming 24-hour operation in 40°C.

Chapter 9 External Dimensions

9.1 Servo Motor Type, Pulse Motor Type (Battery-less Absolute Specification)

9.1.1 Work Moving Type

[1] Two-Axis: X & Y-Axes 200mm Stroke

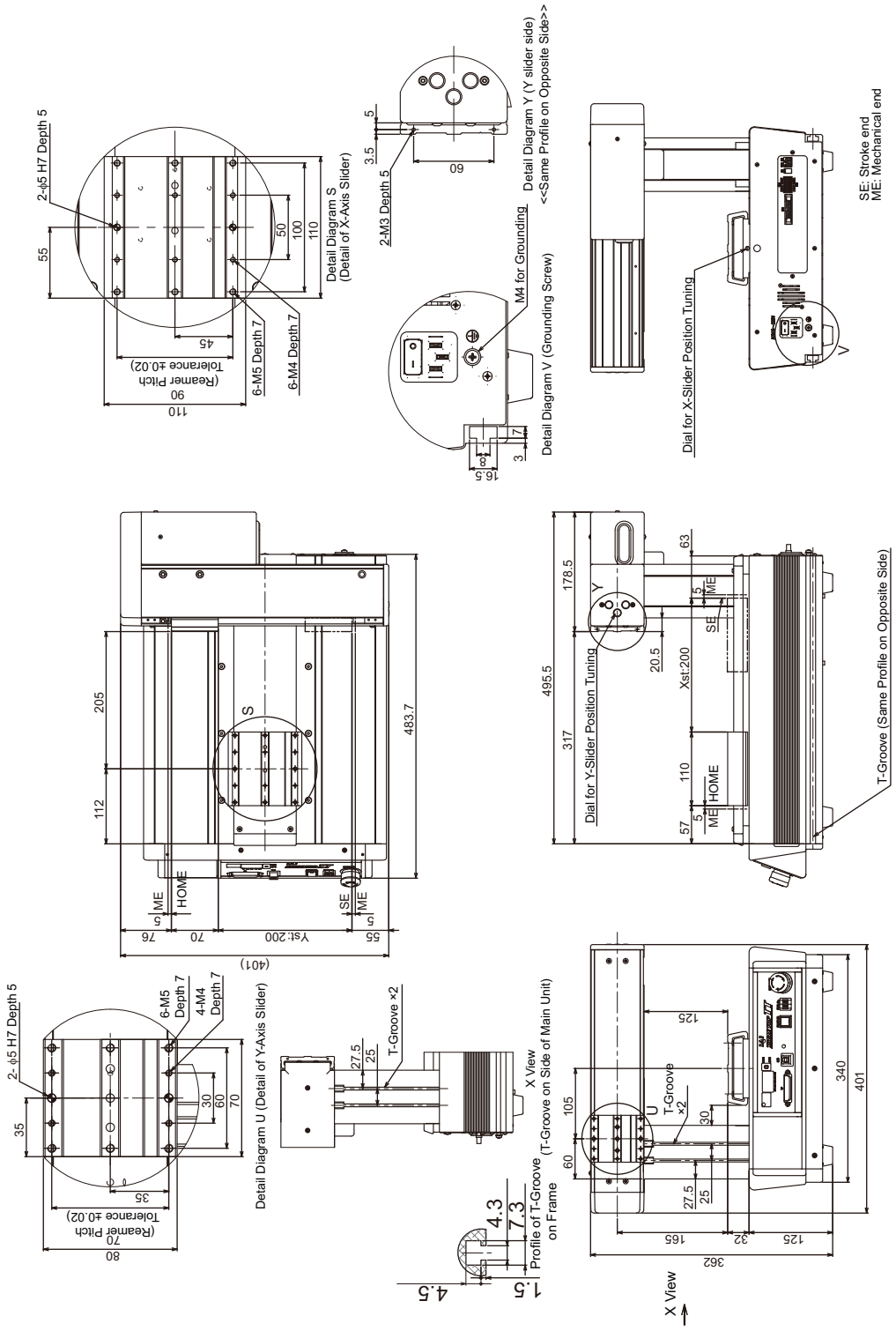

Mass: 24kg

[2] Two-Axis: X & Y-Axes 300mm Stroke

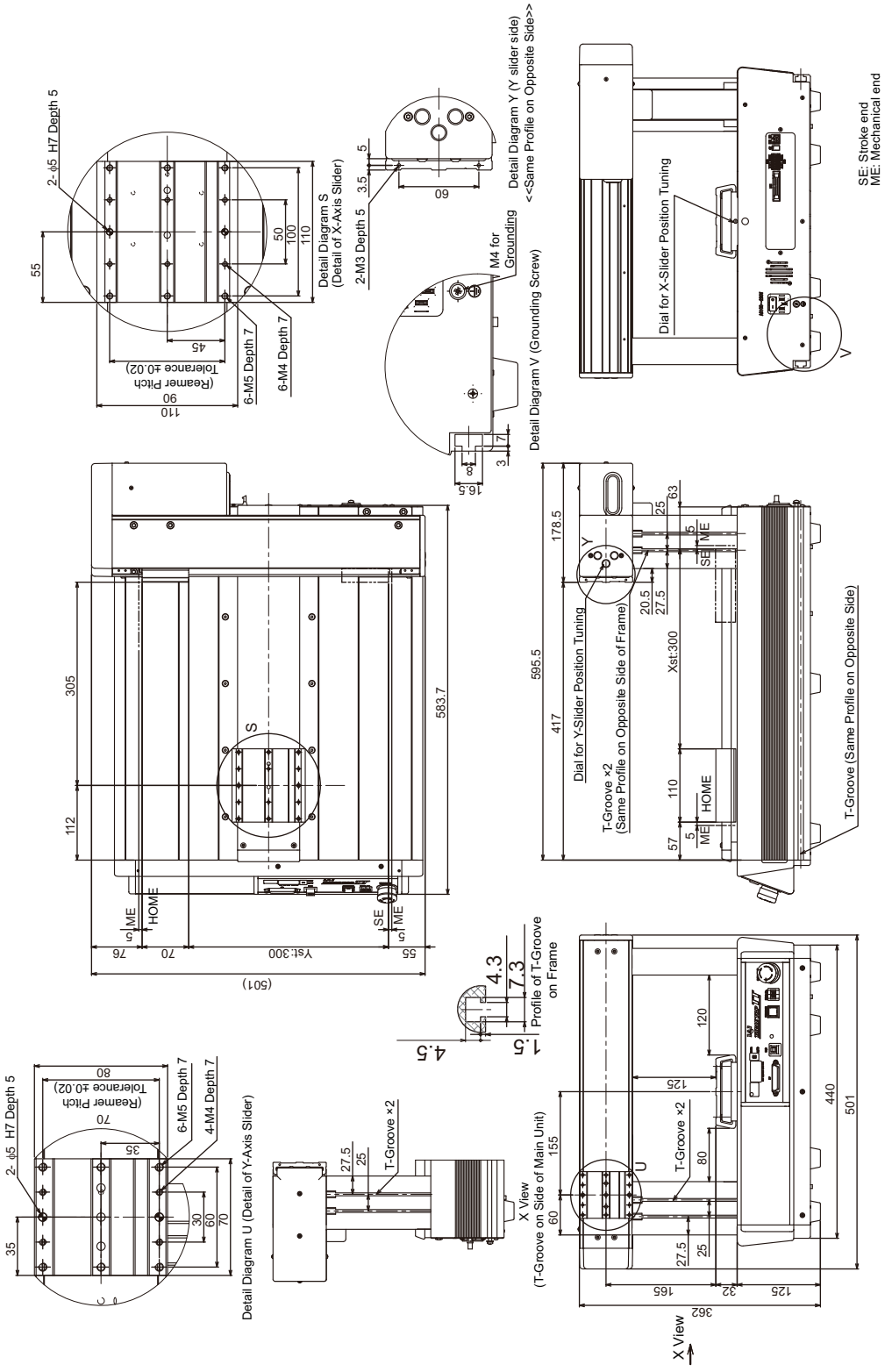

[3] Two-Axis: X & Y-Axes 400mm Stroke

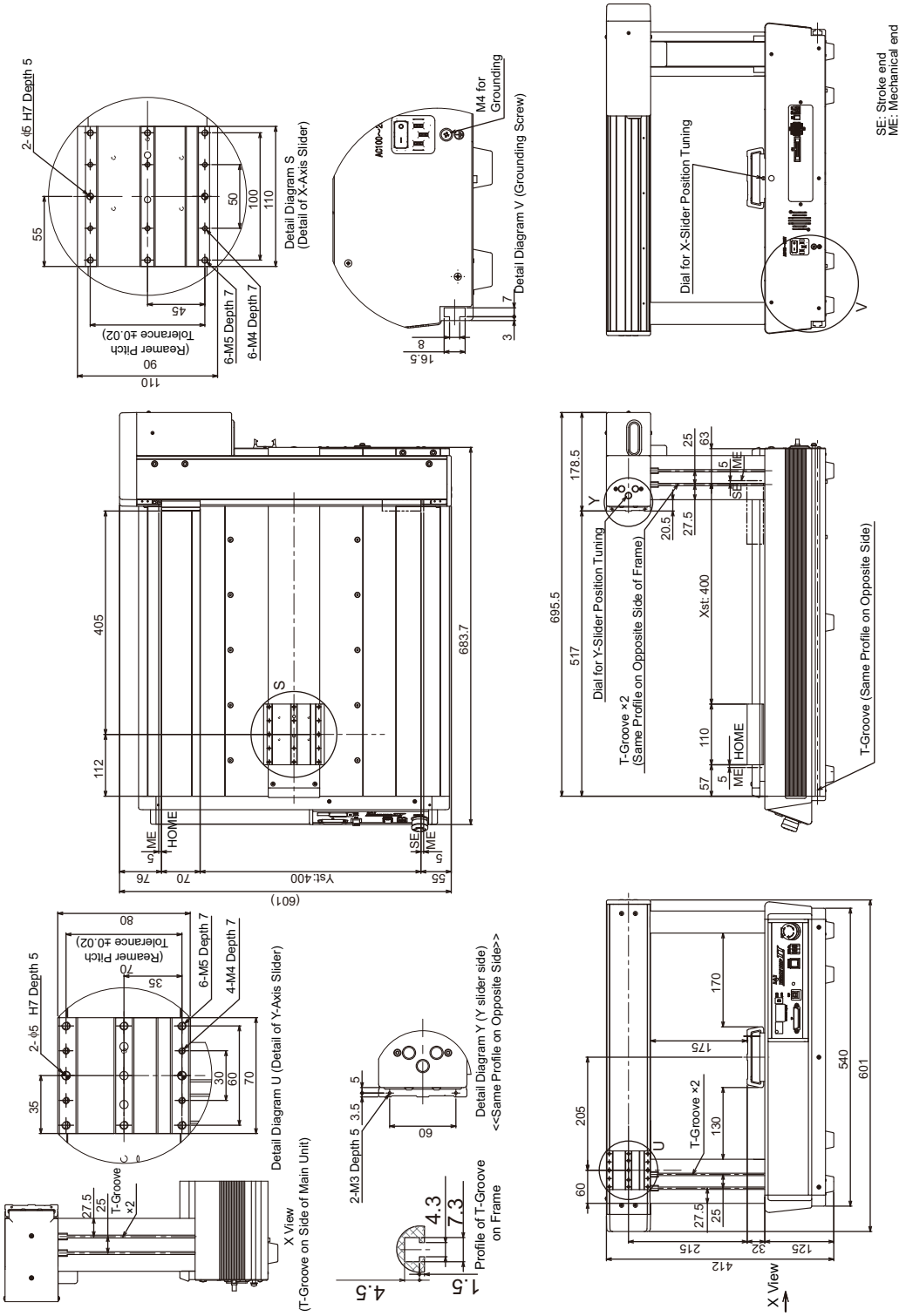

Mass: 37kg

[4] Two-Axis: X & Y-Axes 500mm Stroke

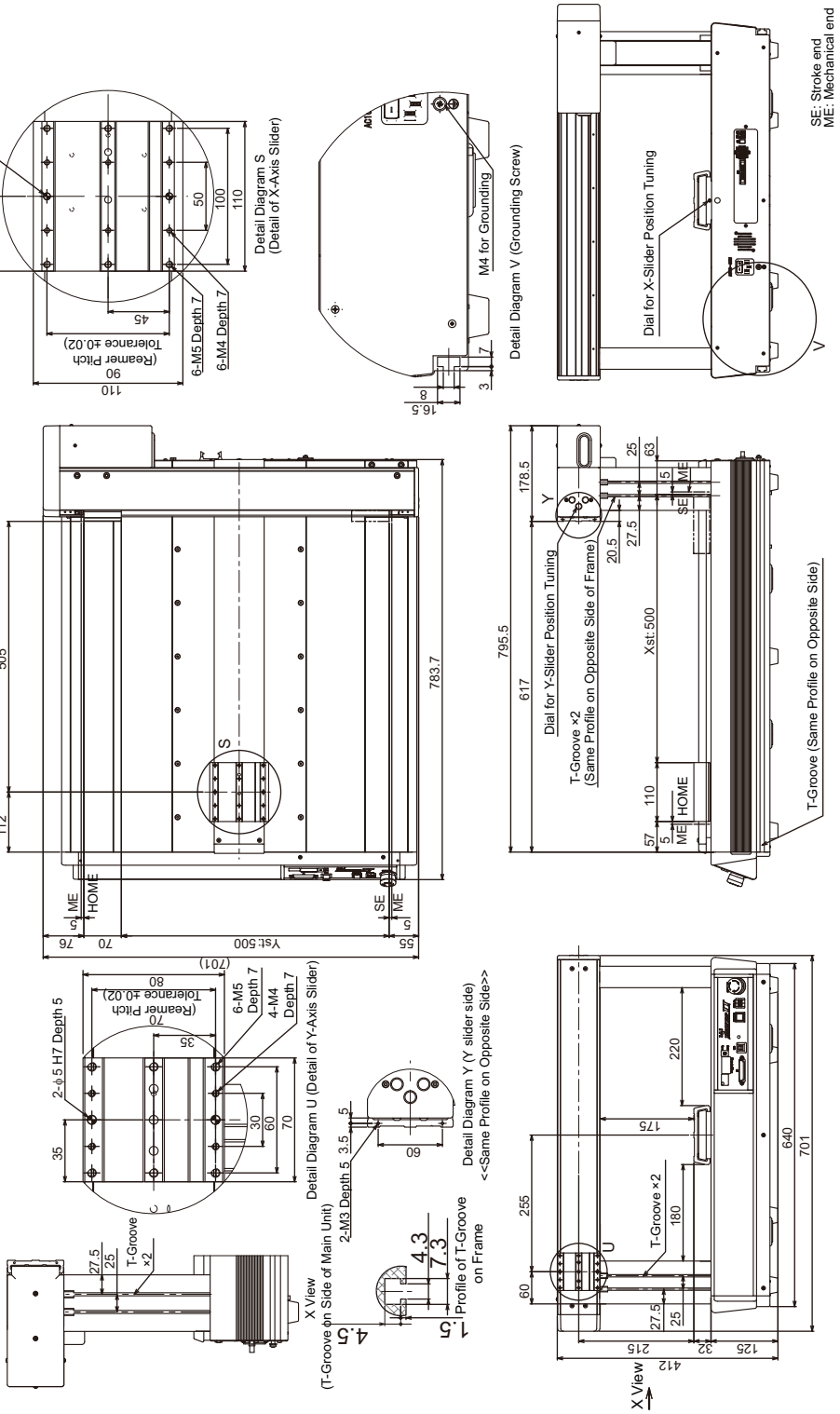

Mass: 44kg

[5] Three-Axis: X & Y-Axes 200mm Stroke, Z-Axis 100mm/150mm Stroke

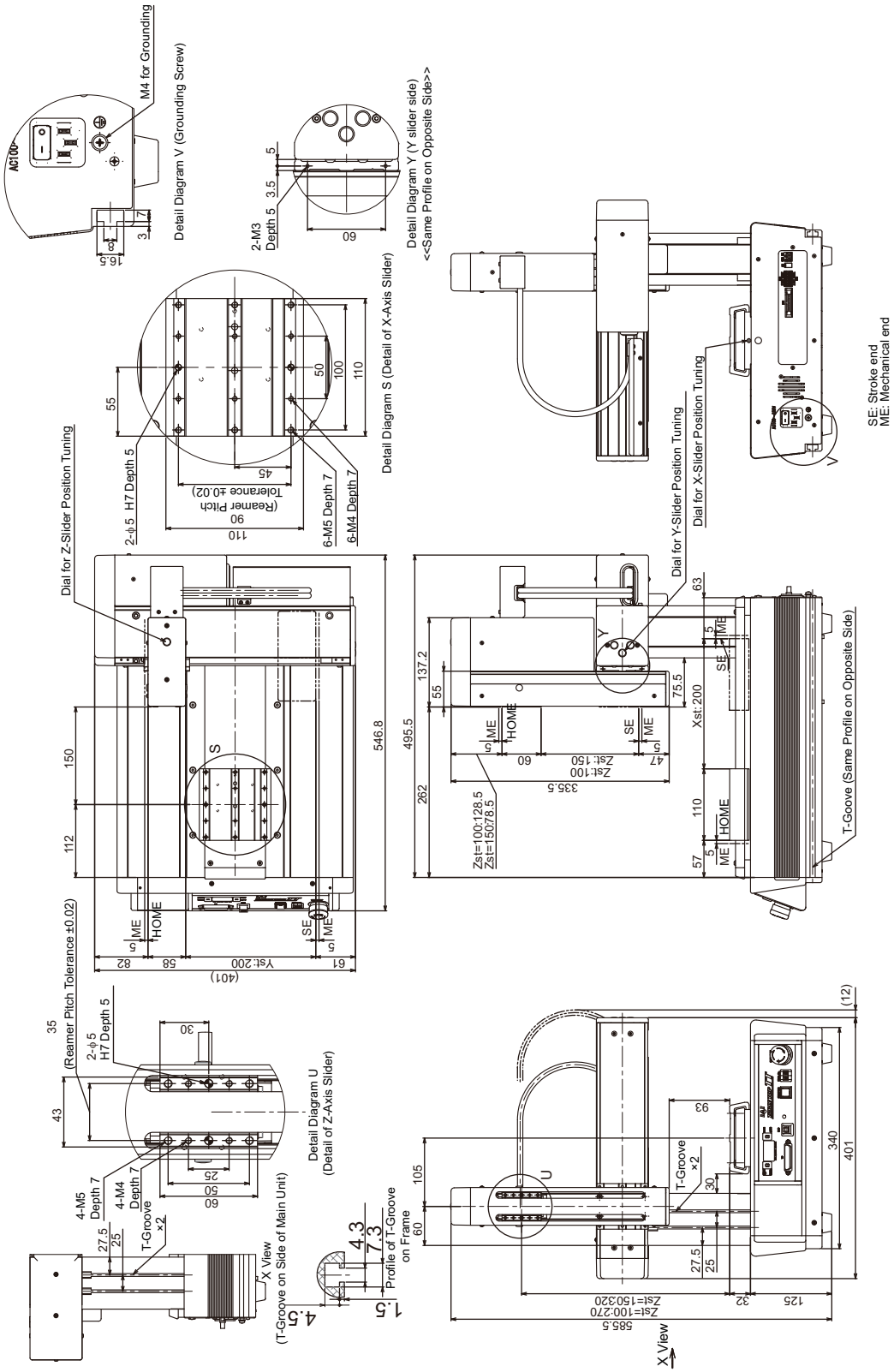

Mass: 27.3kg

[6] Three-Axis: X & Y-Axes 300mm Stroke, Z-Axis 100mm/150mm Stroke

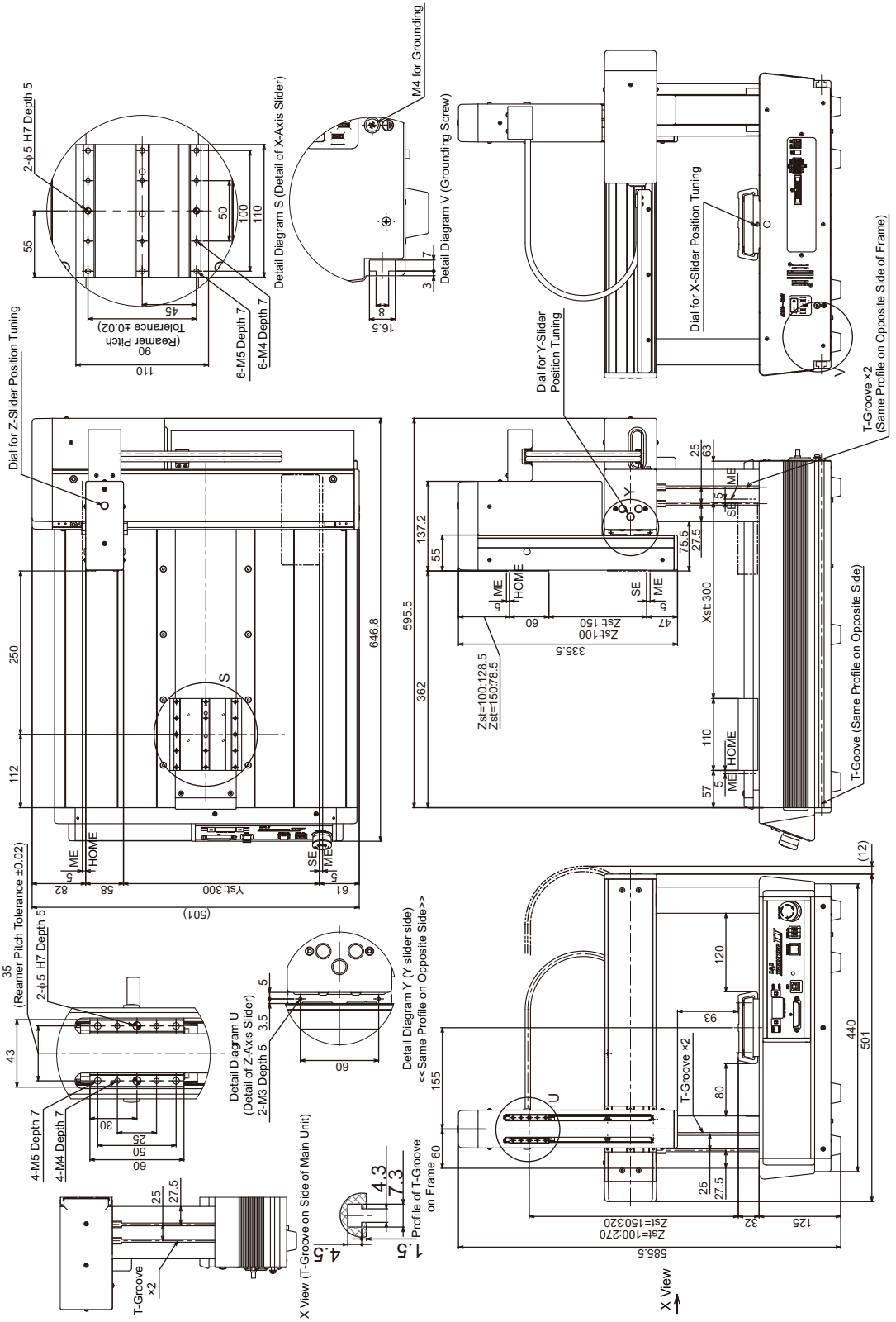

Mass: 34.3kg

[7] Three-Axis: X & Y-Axes 400mm Stroke, Z-Axis 100mm/150mm Stroke

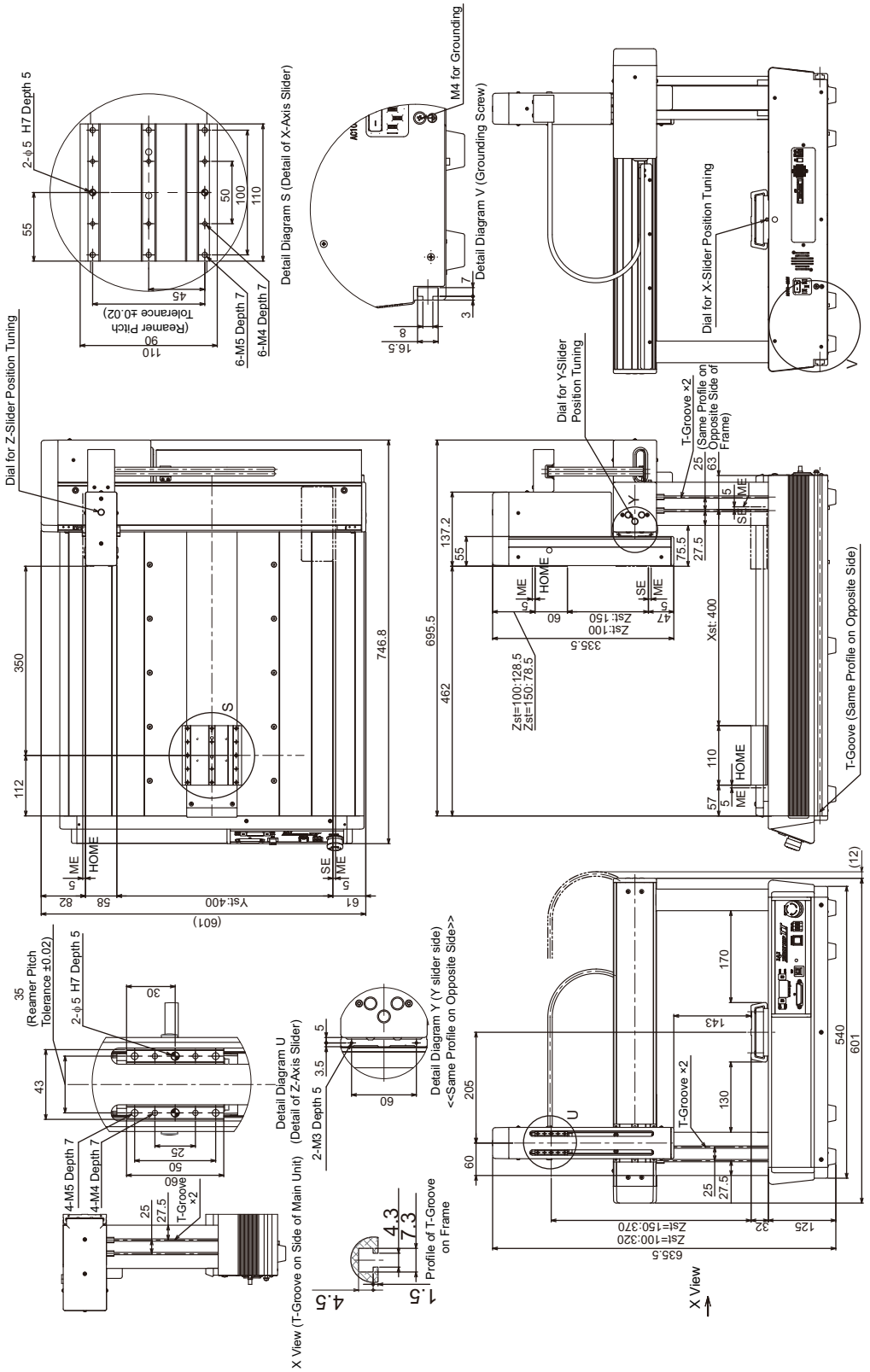

Mass: 40.3kg

[8] Three-Axis: X & Y-Axes 500mm Stroke, Z-Axis 100mm/150mm Stroke

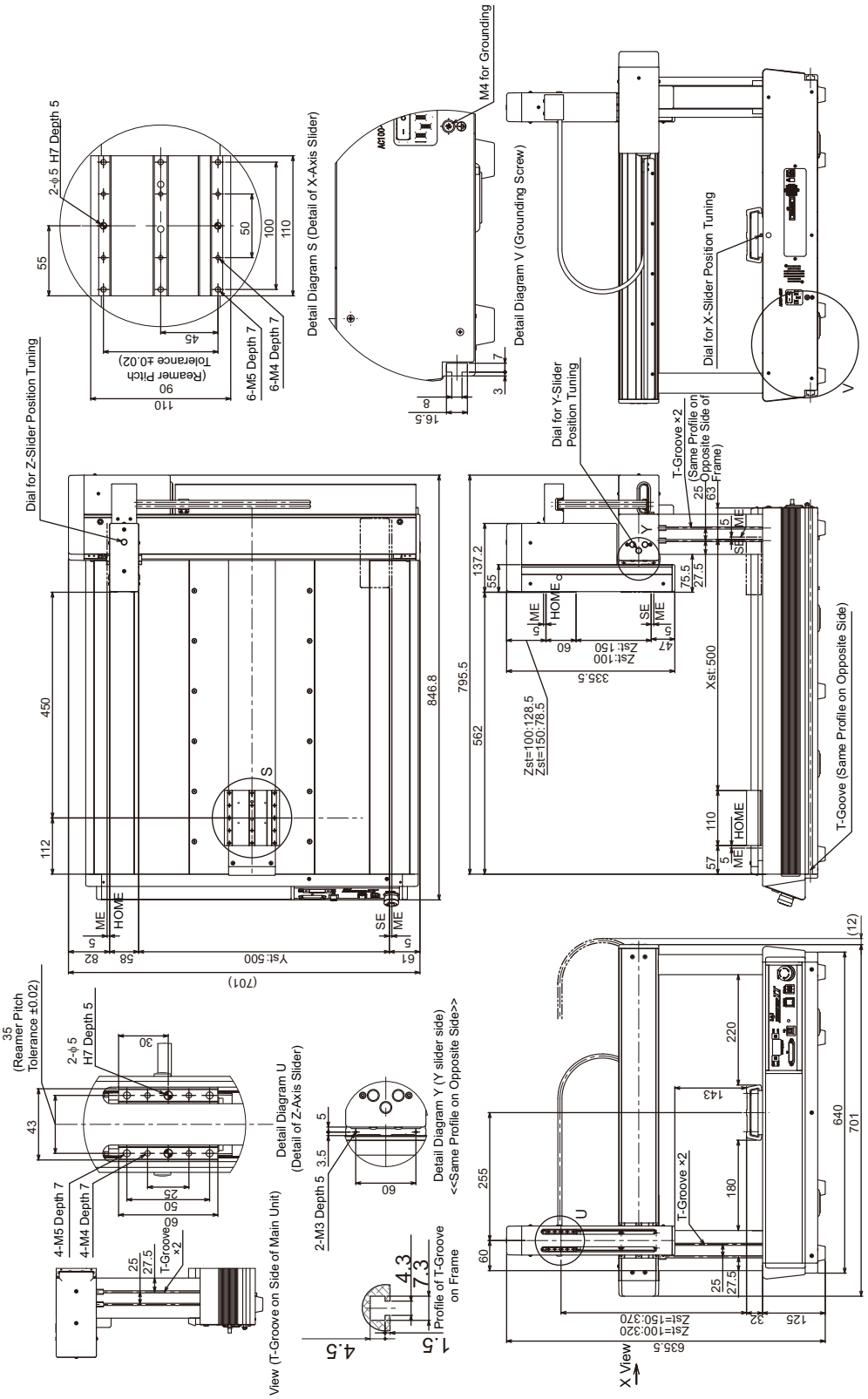

Mass: 47.3kg

[9] Four-Axis: X & Y-Axes 200mm Stroke, Z-Axis 100mm/150mm Stroke

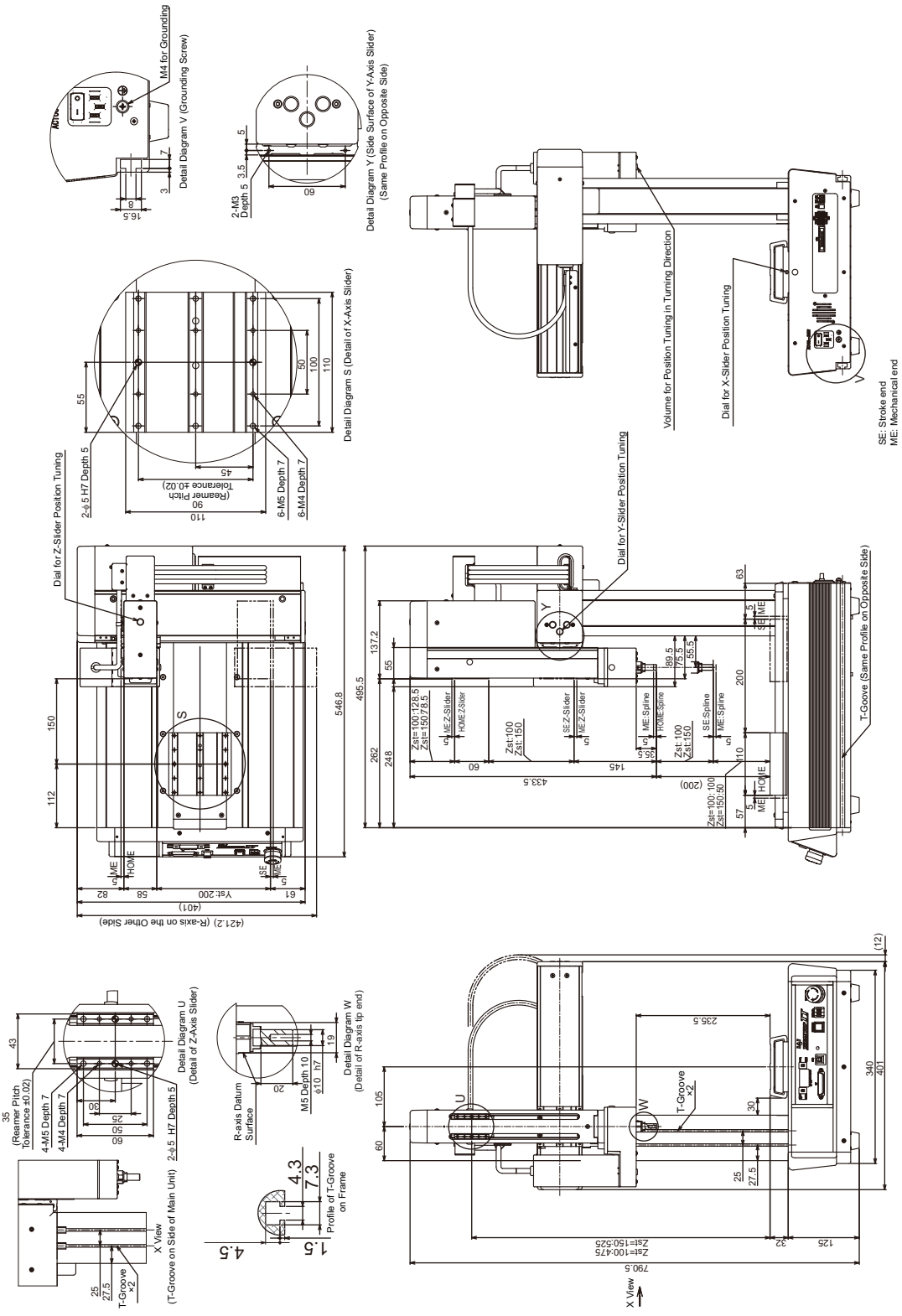

Mass: 29.3kg

[10] Four-Axis: X & Y-Axes 300mm Stroke, Z-Axis 100mm/150mm Stroke

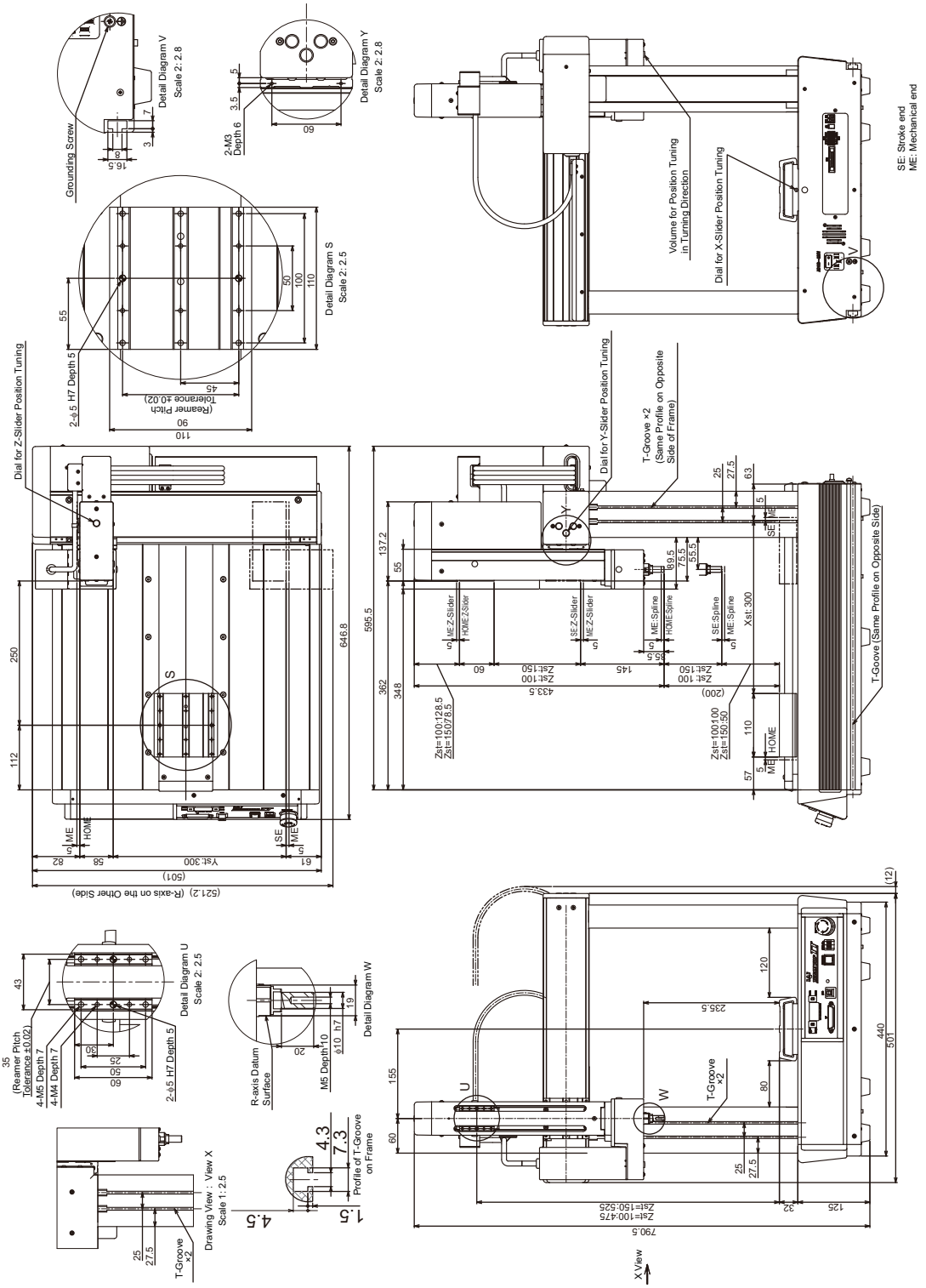

Mass: 36.3kg

[11] Four-Axis: X & Y-Axes 400mm Stroke, Z-Axis 100mm/150mm Stroke

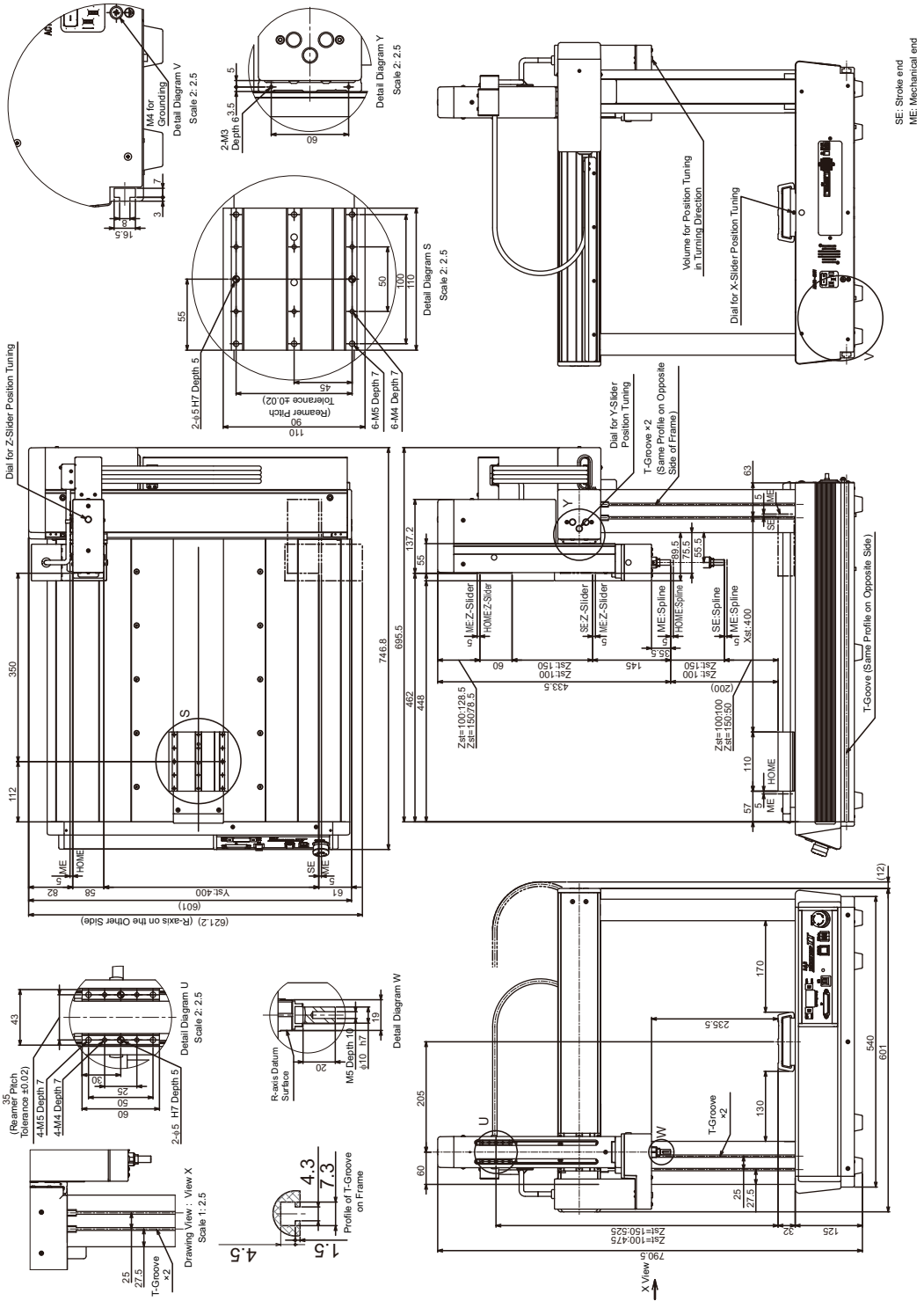

Mass: 42.3kg

[12] Four-Axis: X & Y-Axes 500mm Stroke, Z-Axis 100mm/150mm Stroke

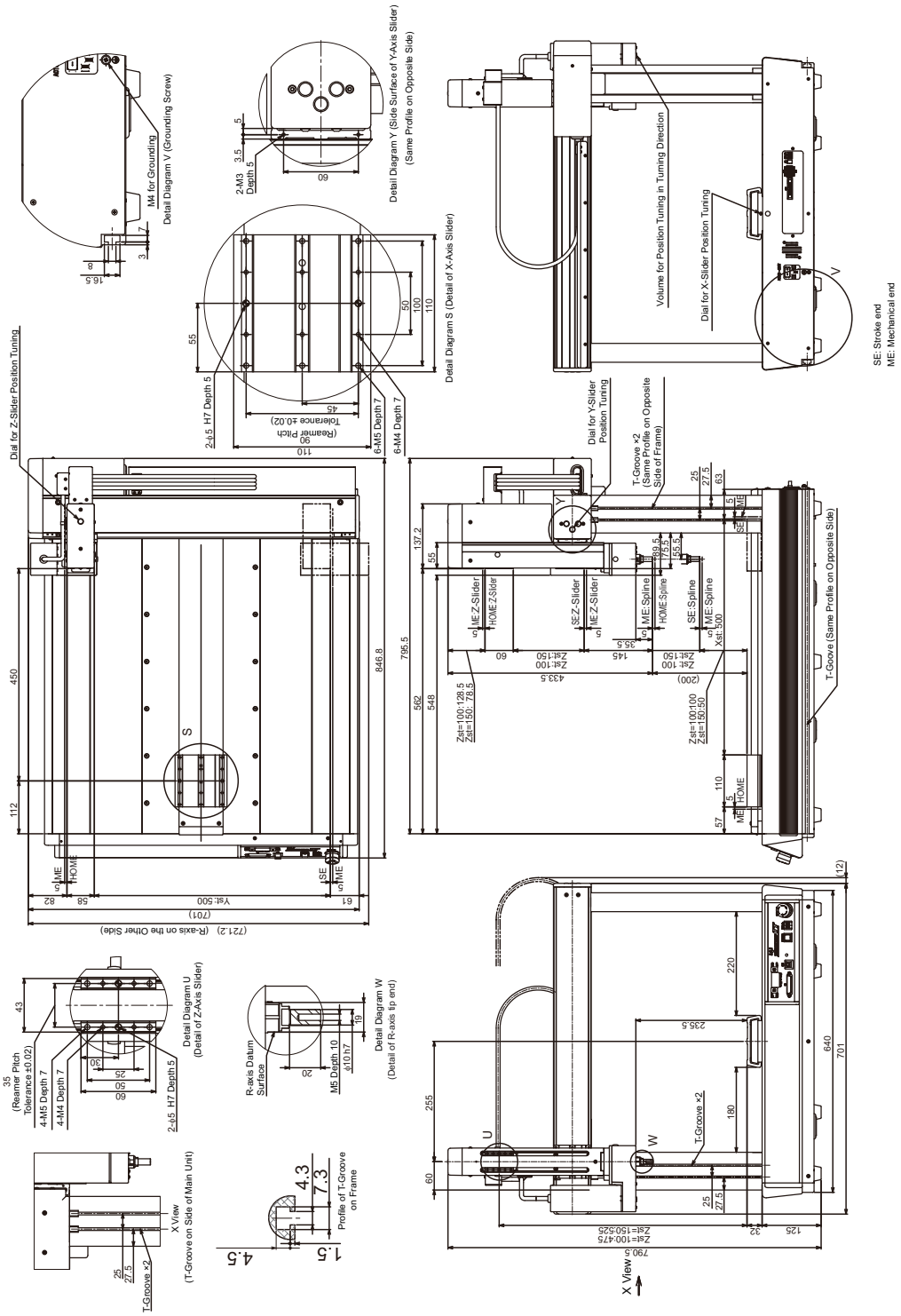

Mass: 49.3kg

9.1.2 Work Fixing Type

[1] Two-Axis: X- Axis 200mm Stroke, Y-Axis 150mm Stroke

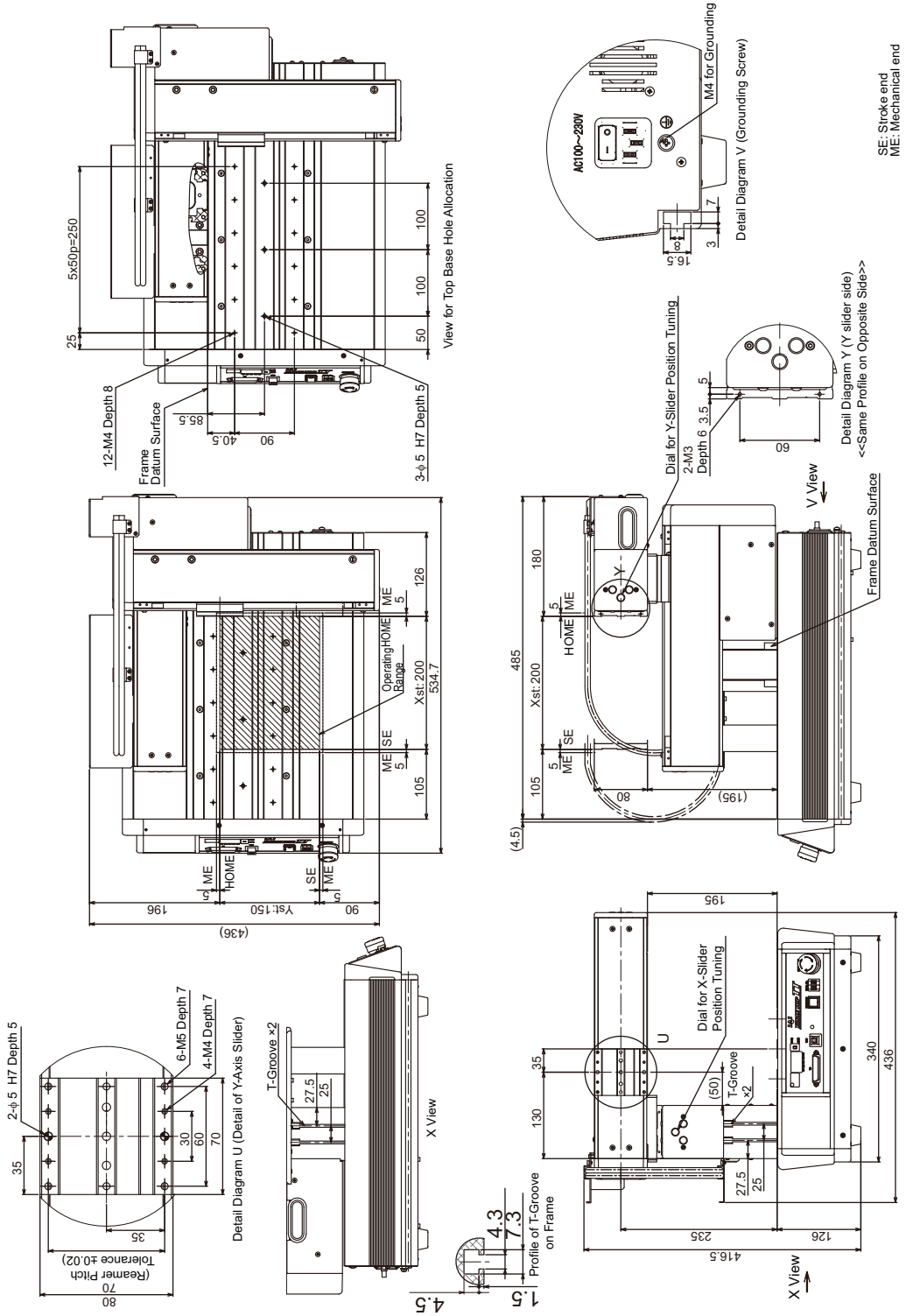

Mass: 25kg

[2] Two-Axis: X- Axis 300mm Stroke, Y-Axis 250mm Stroke

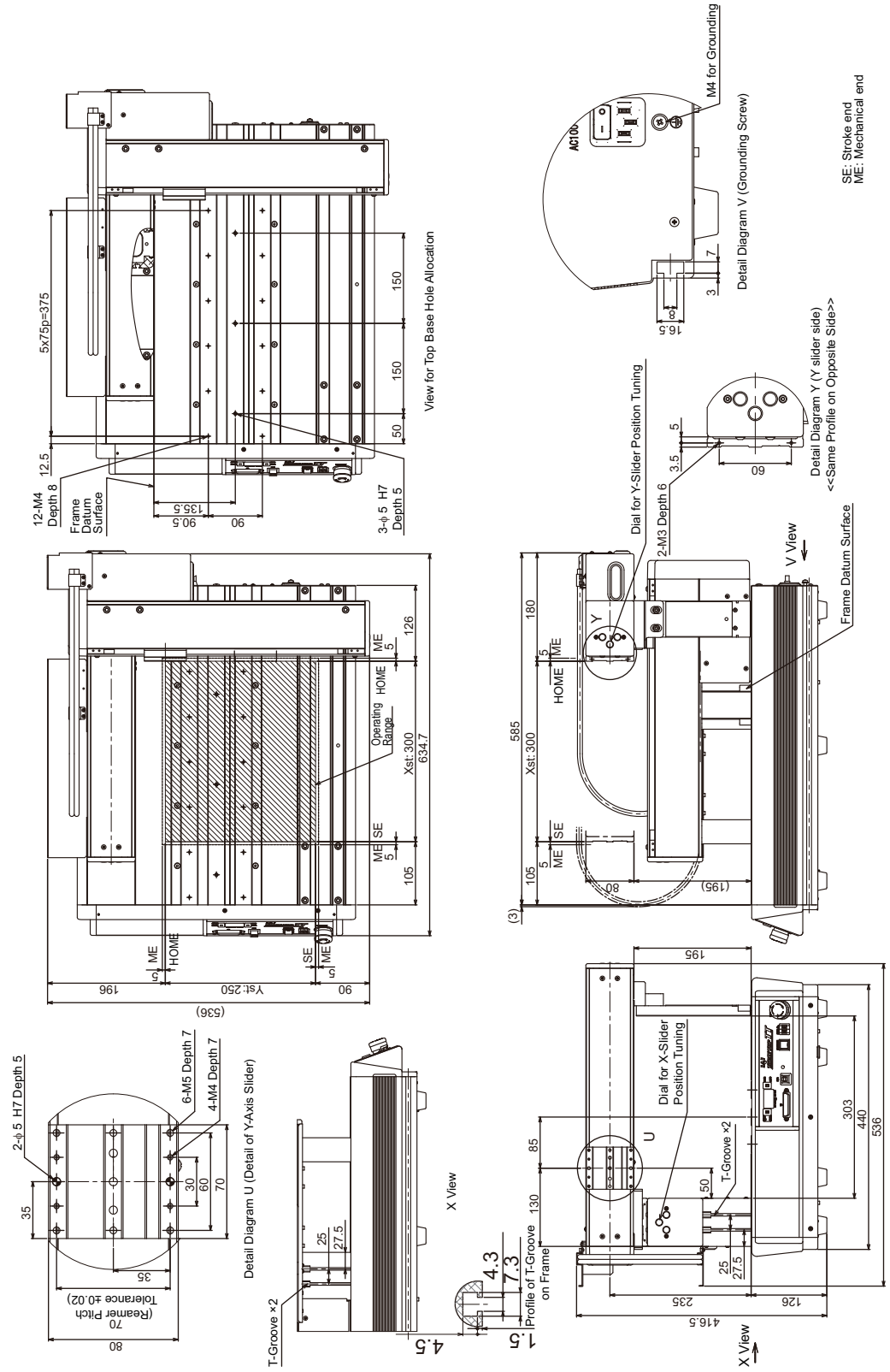

Mass: 33kg

[3] Two-Axis: X- Axis 400mm Stroke, Y-Axis 350mm Stroke

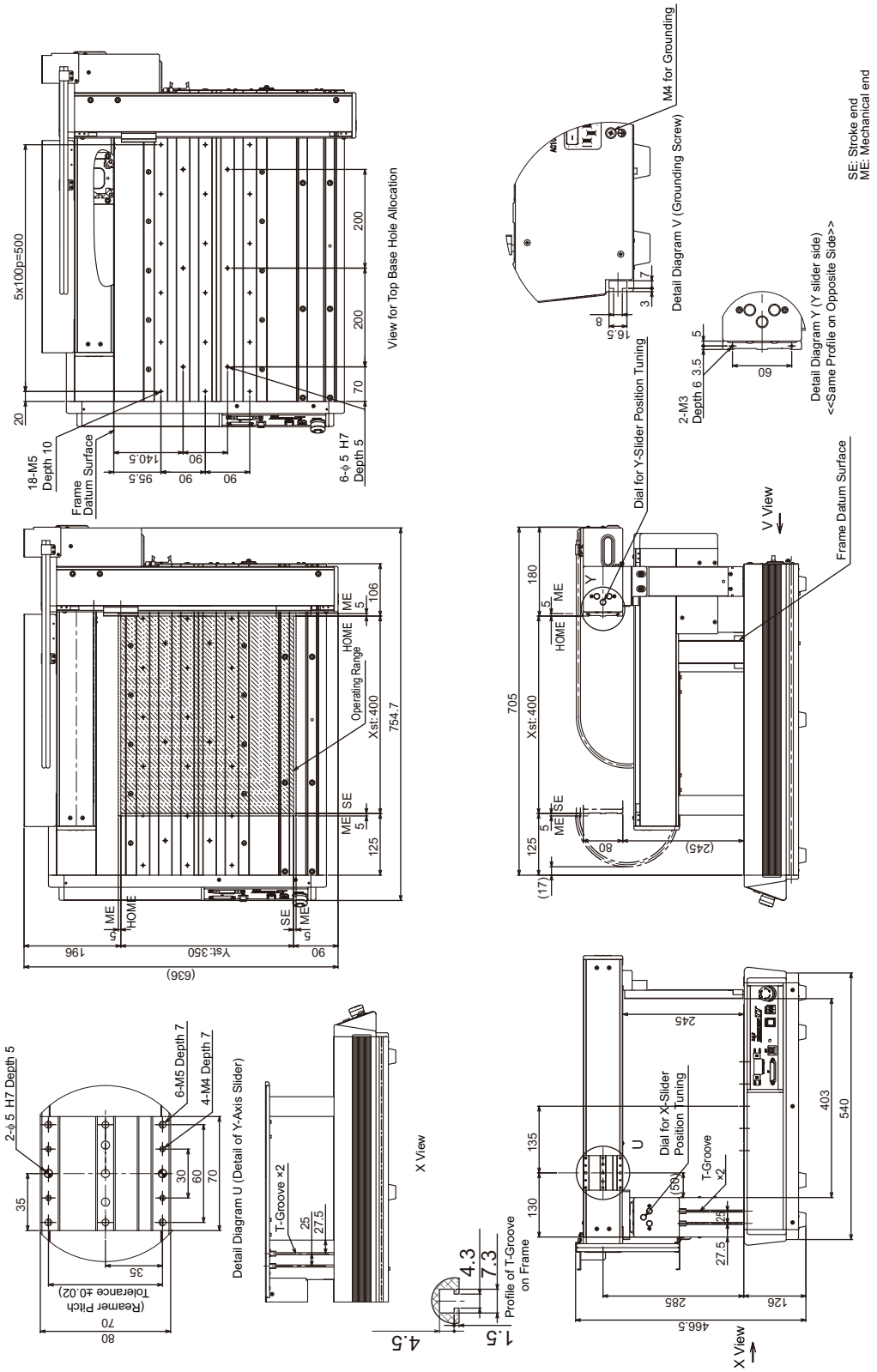

Mass: 40kg

[4] Two-Axis: X- Axis 500mm Stroke, Y-Axis 450mm Stroke

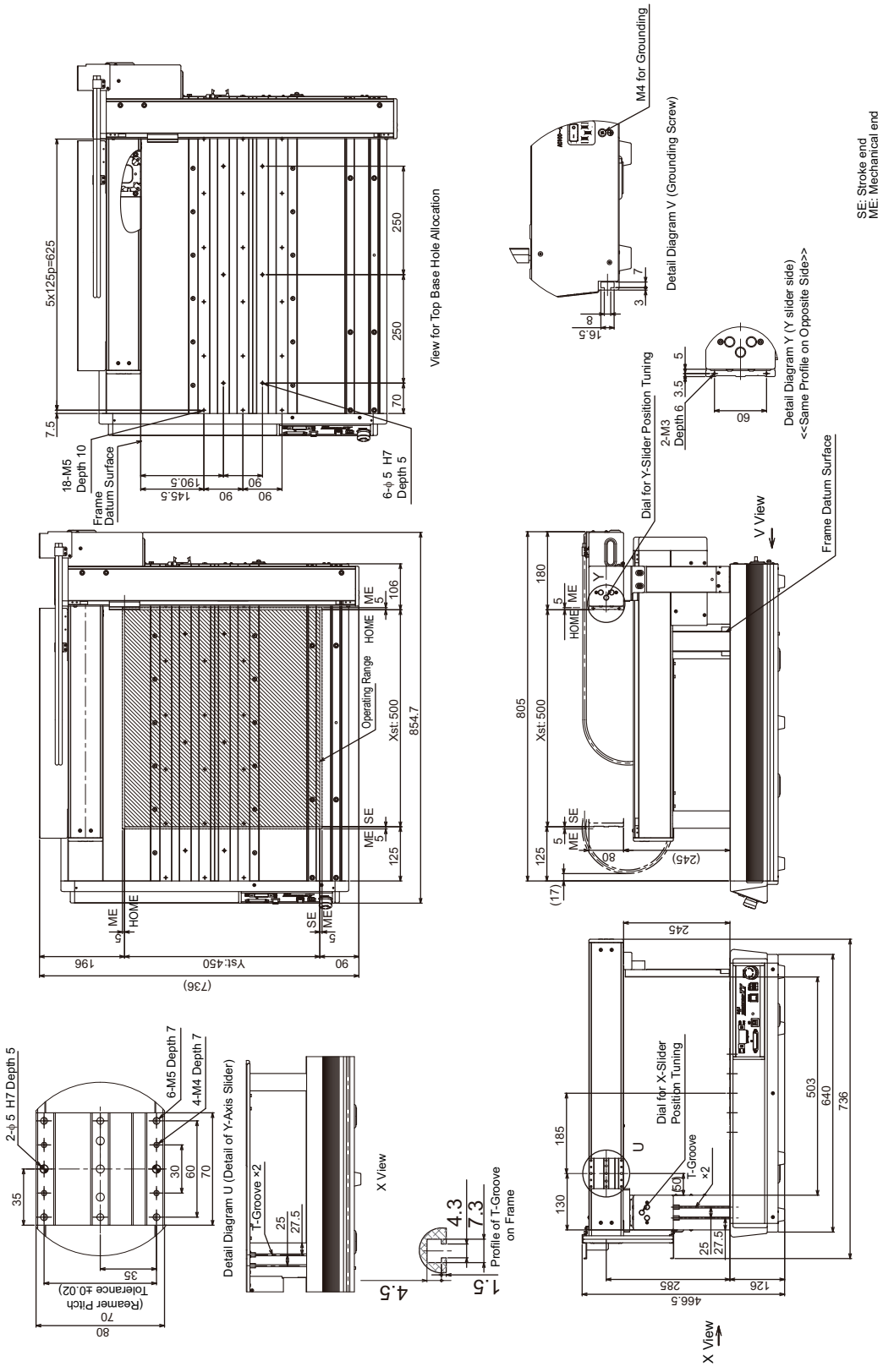

Mass: 47kg

[5] Three-Axis: X- Axis 200mm Stroke, Y-Axis 150mm Stroke, Z-Axis 100mm/150mm Stroke

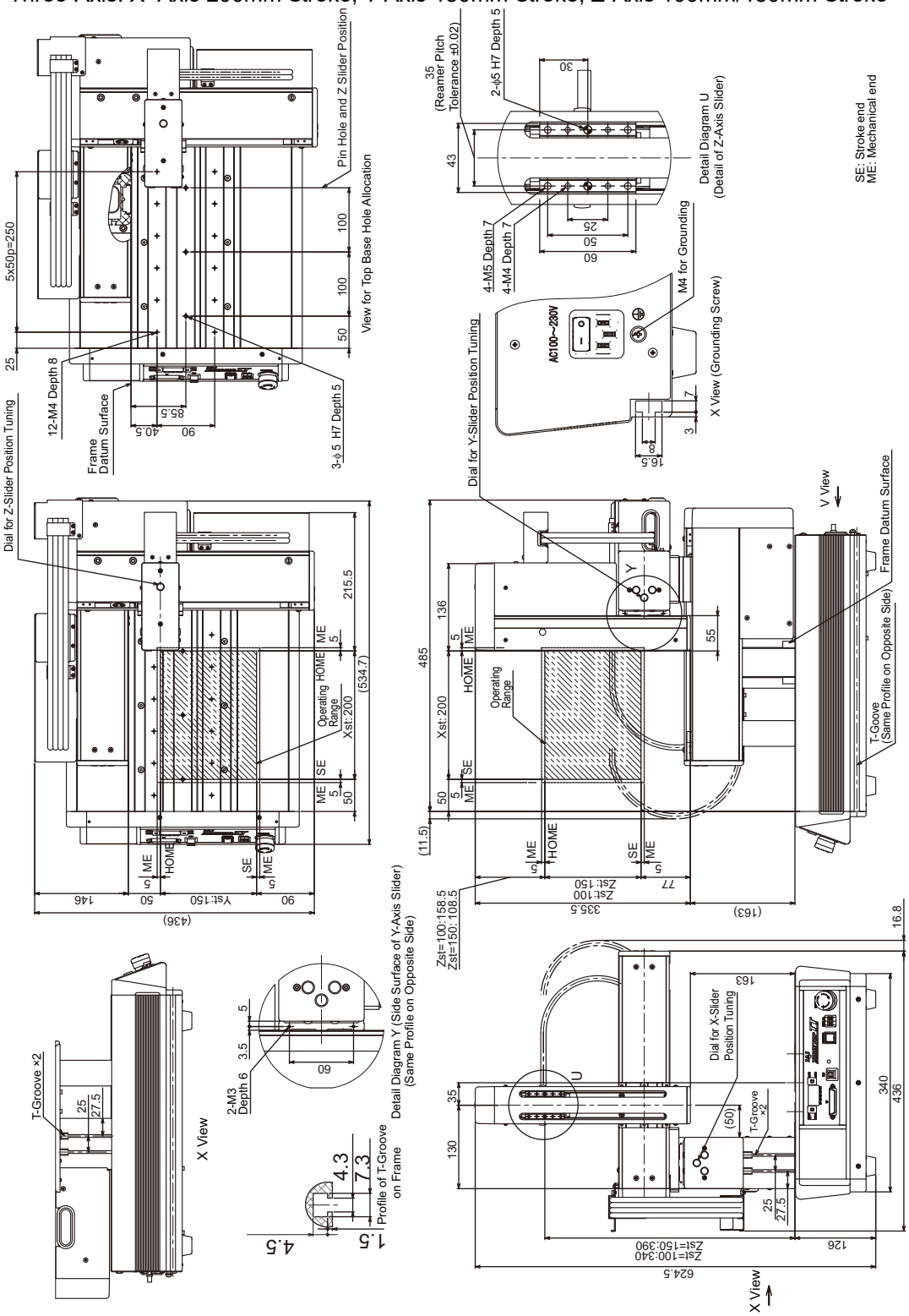

Mass: 29.3kg

[6] Three-Axis: X- Axis 300mm Stroke, Y-Axis 250mm Stroke, Z-Axis 100mm/150mm Stroke

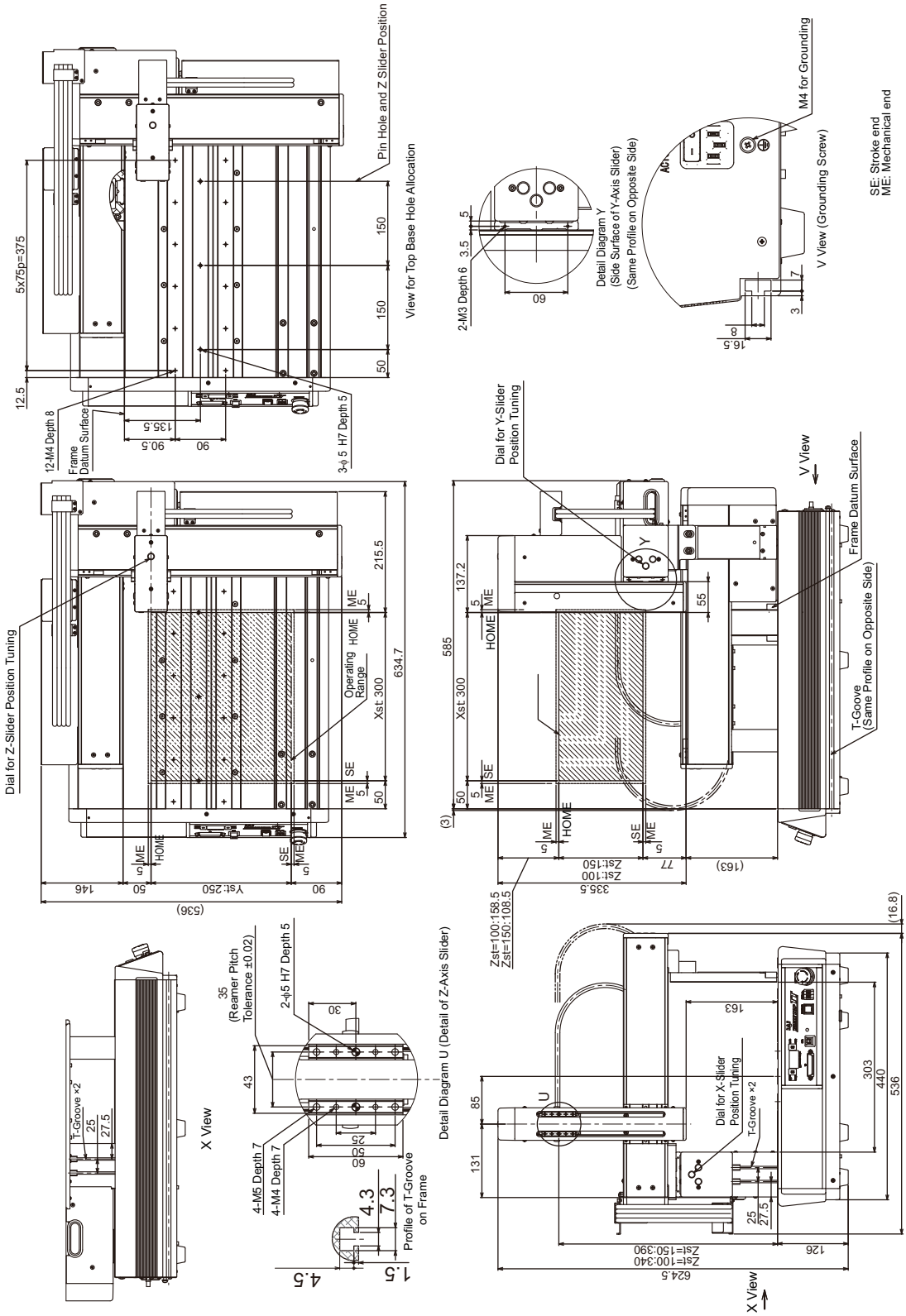

Mass: 37.3kg

[7] Three-Axis: X- Axis 400mm Stroke, Y-Axis 350mm Stroke, Z-Axis 100mm/150mm Stroke

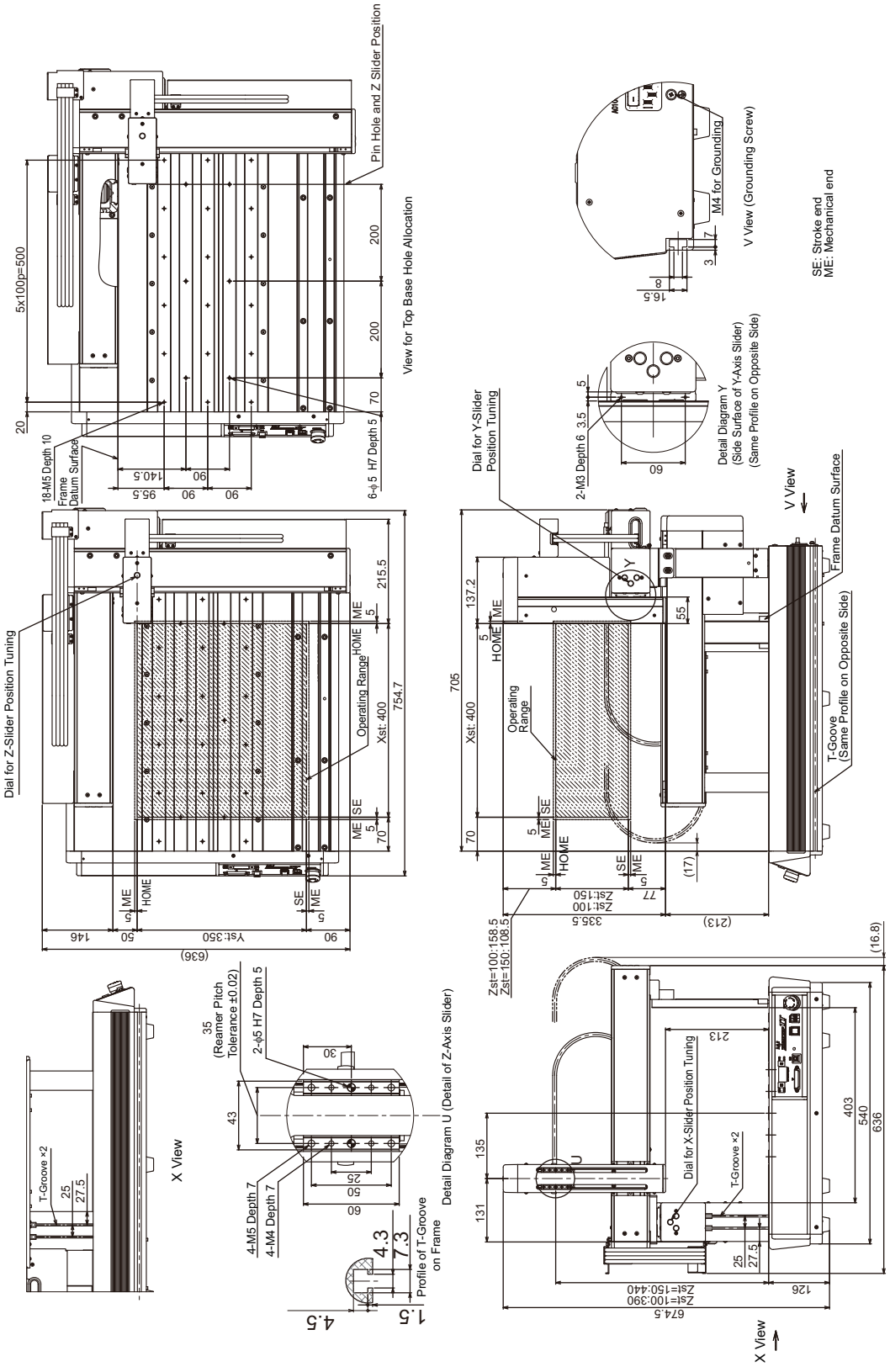

Mass: 44.3kg

[8] Three-Axis: X- Axis 500mm Stroke, Y-Axis 450mm Stroke, Z-Axis 100mm/150mm Stroke

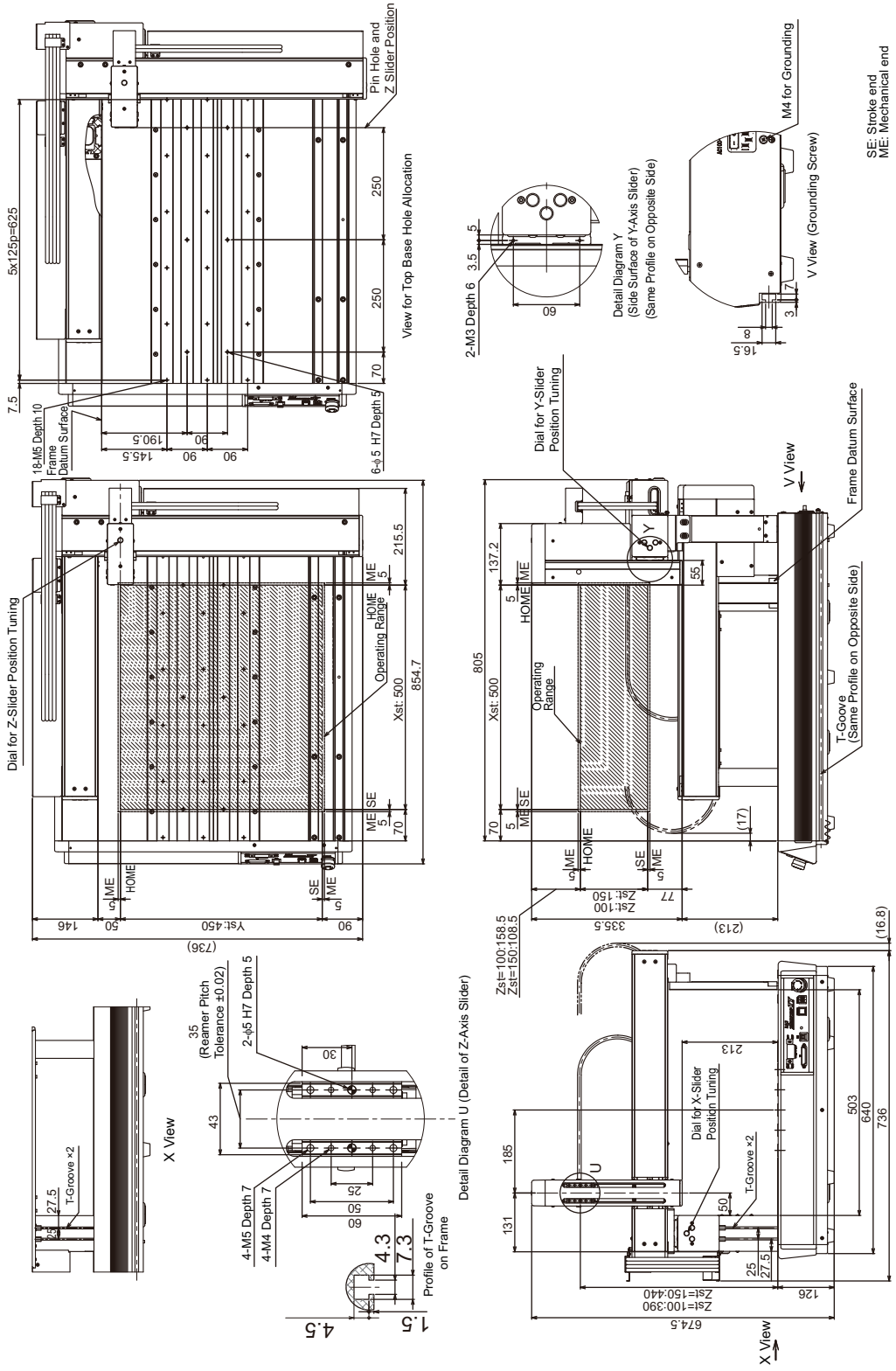

Mass: 51.3kg

[9] Four-Axis: X- Axis 300mm Stroke, Y-Axis 250mm Stroke, Z-Axis 100mm/150mm Stroke

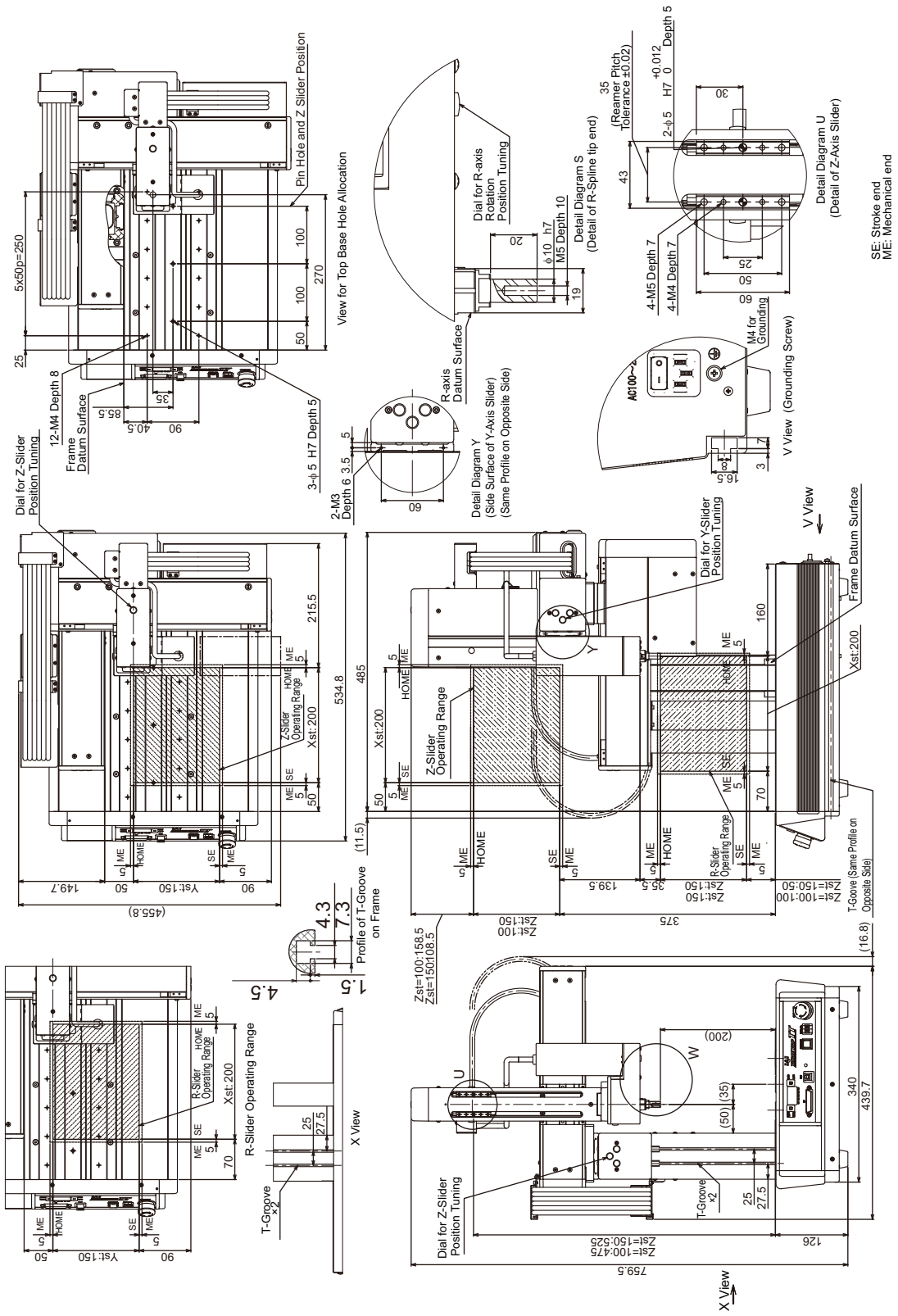

[10] Four-Axis: X- Axis 300mm Stroke, Y-Axis 250mm Stroke, Z-Axis 100mm/150mm Stroke

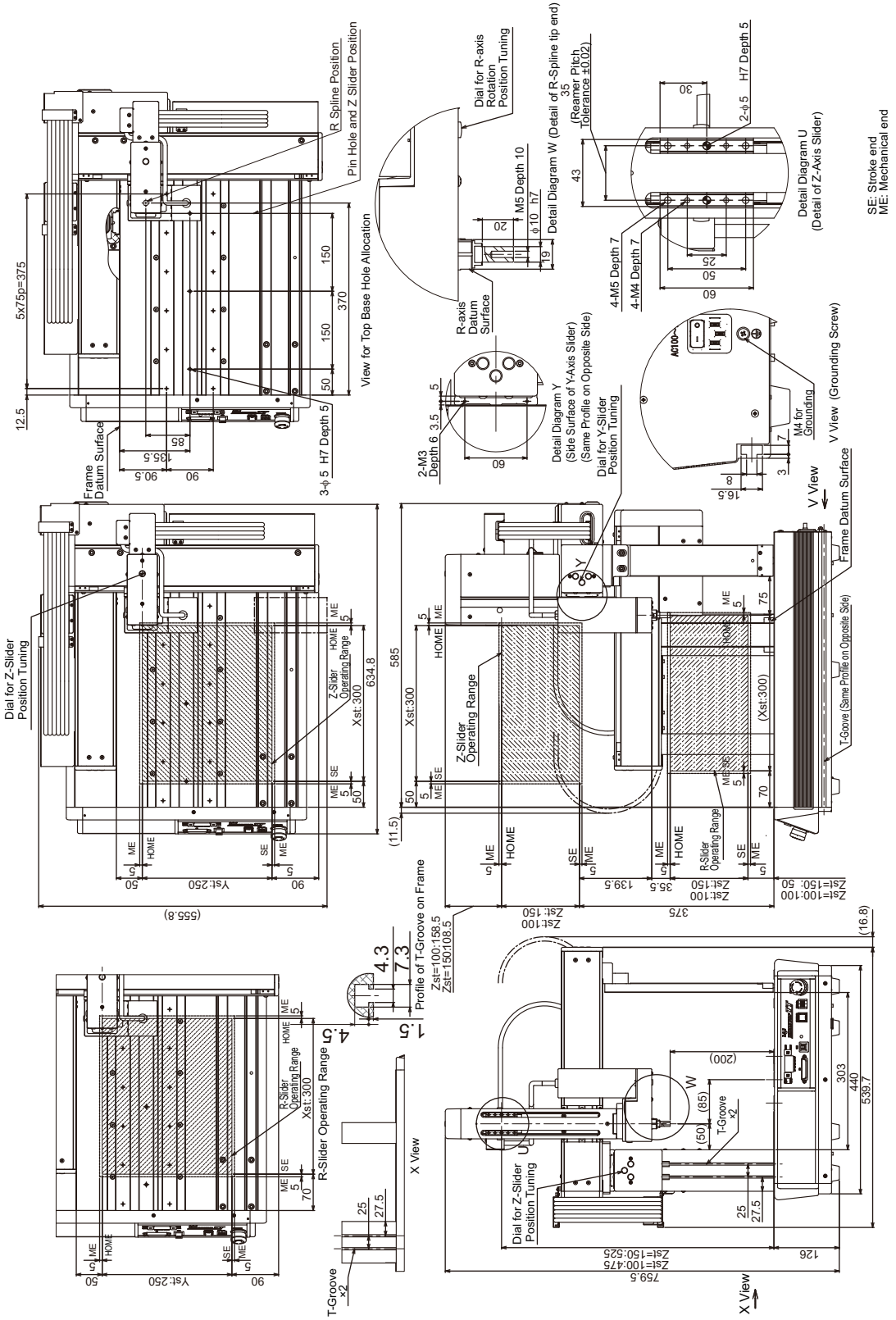

Mass: 39.3kg

[11] Four-Axis: X- Axis 400mm Stroke, Y-Axis 350mm Stroke, Z-Axis 100mm/150mm Stroke

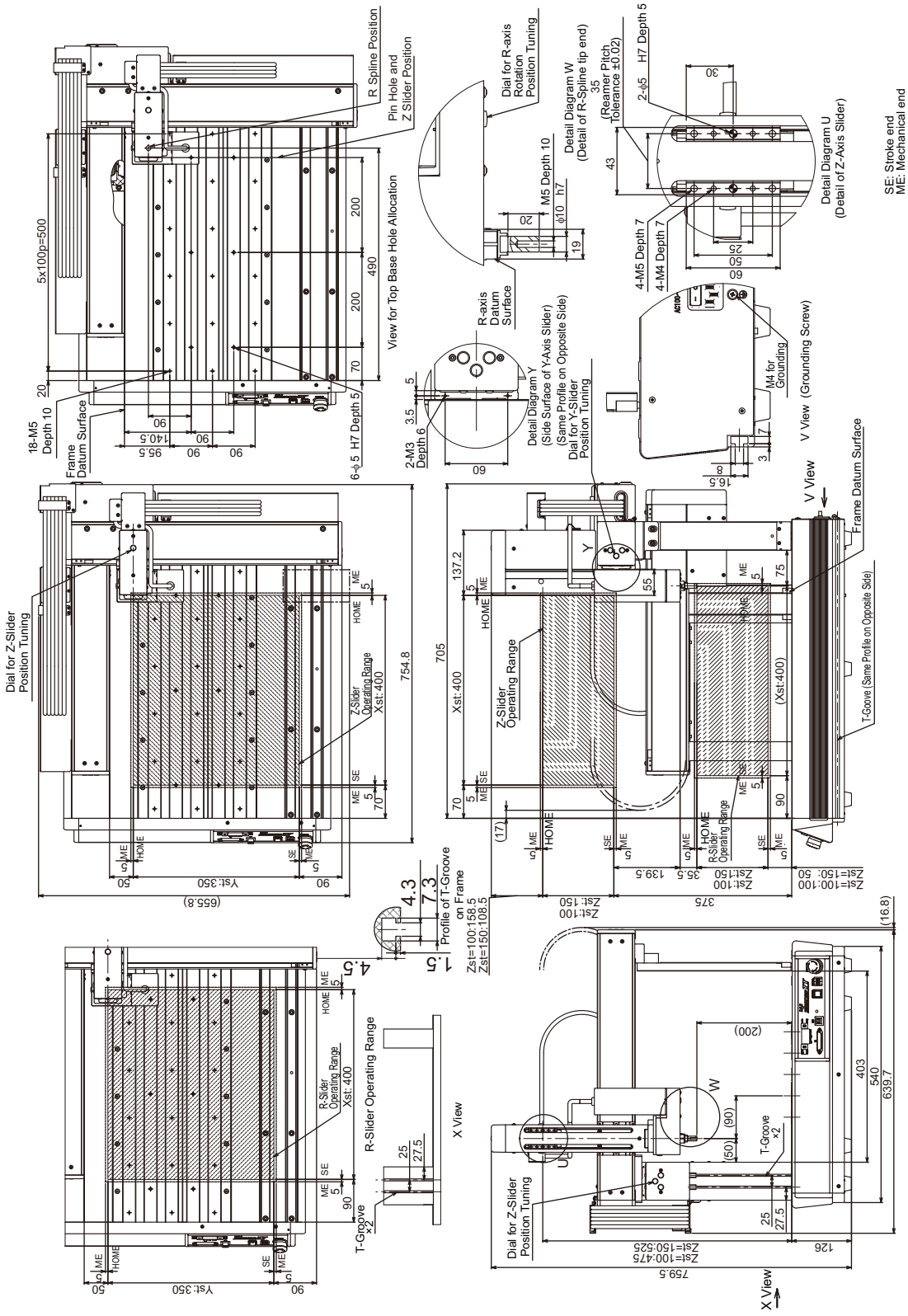

Mass: 46.3kg

[12] Four-Axis: X- Axis 500mm Stroke, Y-Axis 450mm Stroke, Z-Axis 100mm/150mm Stroke

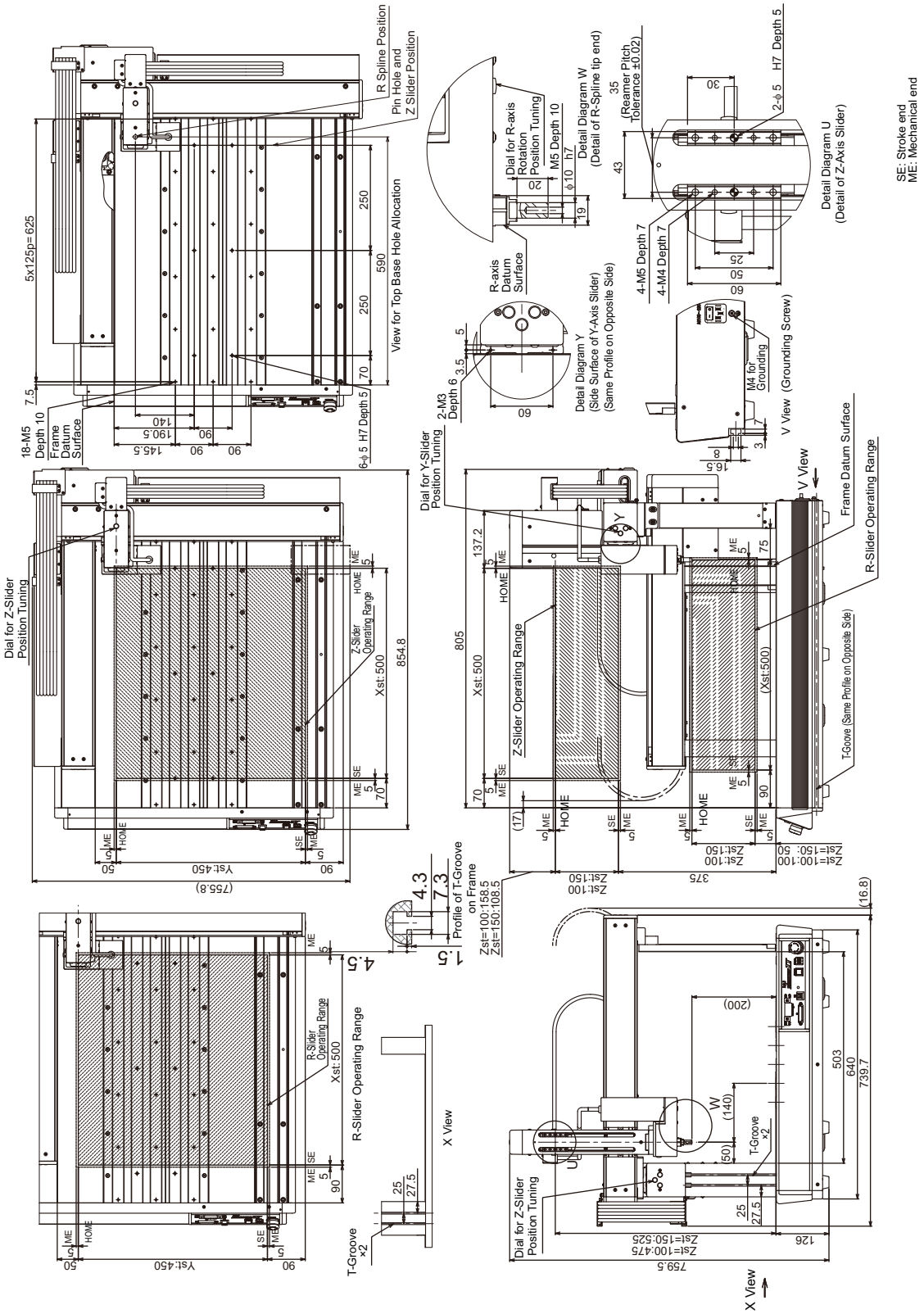

Mass: 53.3kg

9. 2 Pulse Motor Type (Incremental Specification)

9.2.1 Work Moving Type

[1] Two-Axis: X & Y-Axes 200mm Stroke

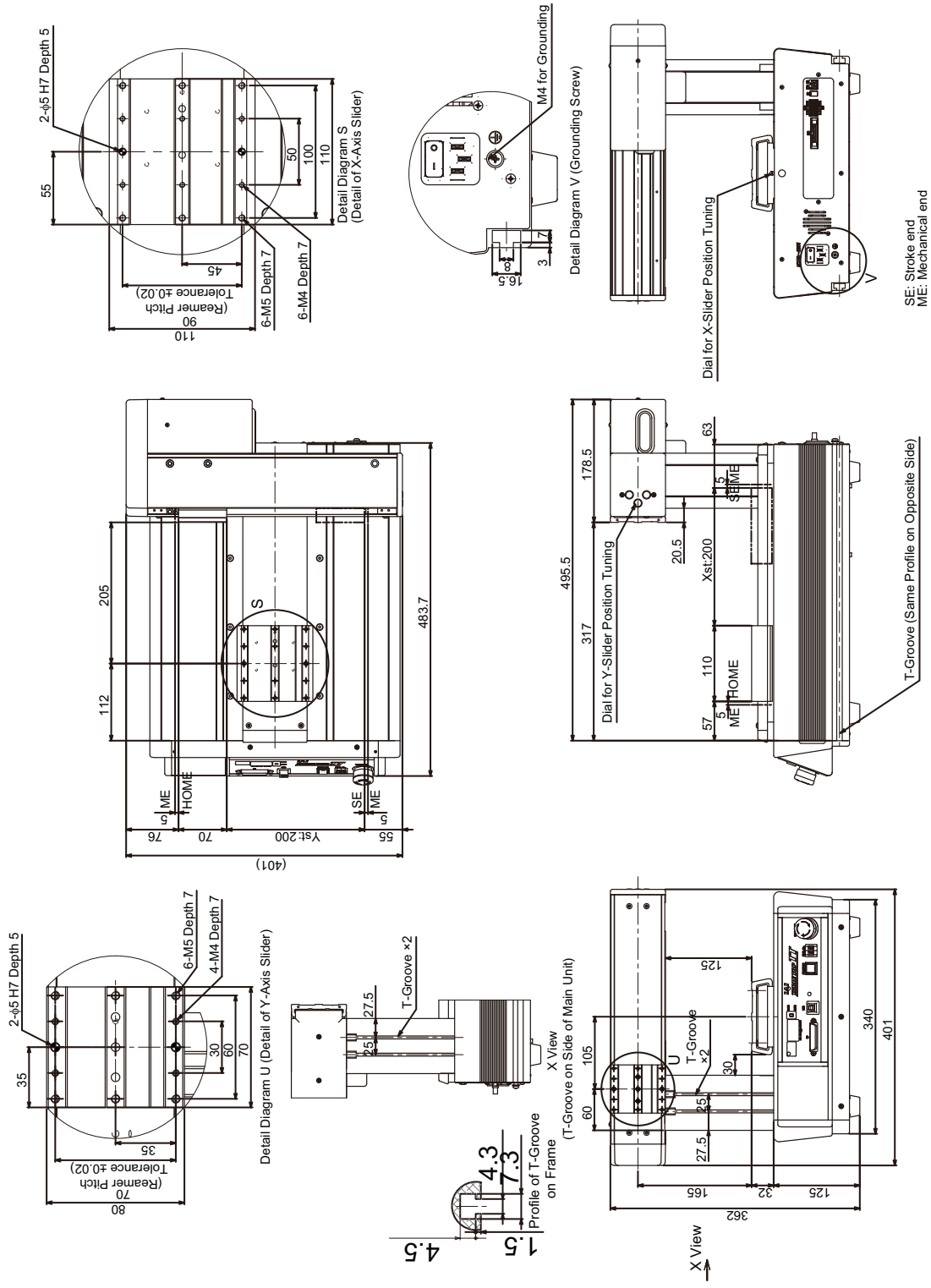

Mass: 24kg

[2] Two-Axis: X & Y-Axes 300mm Stroke

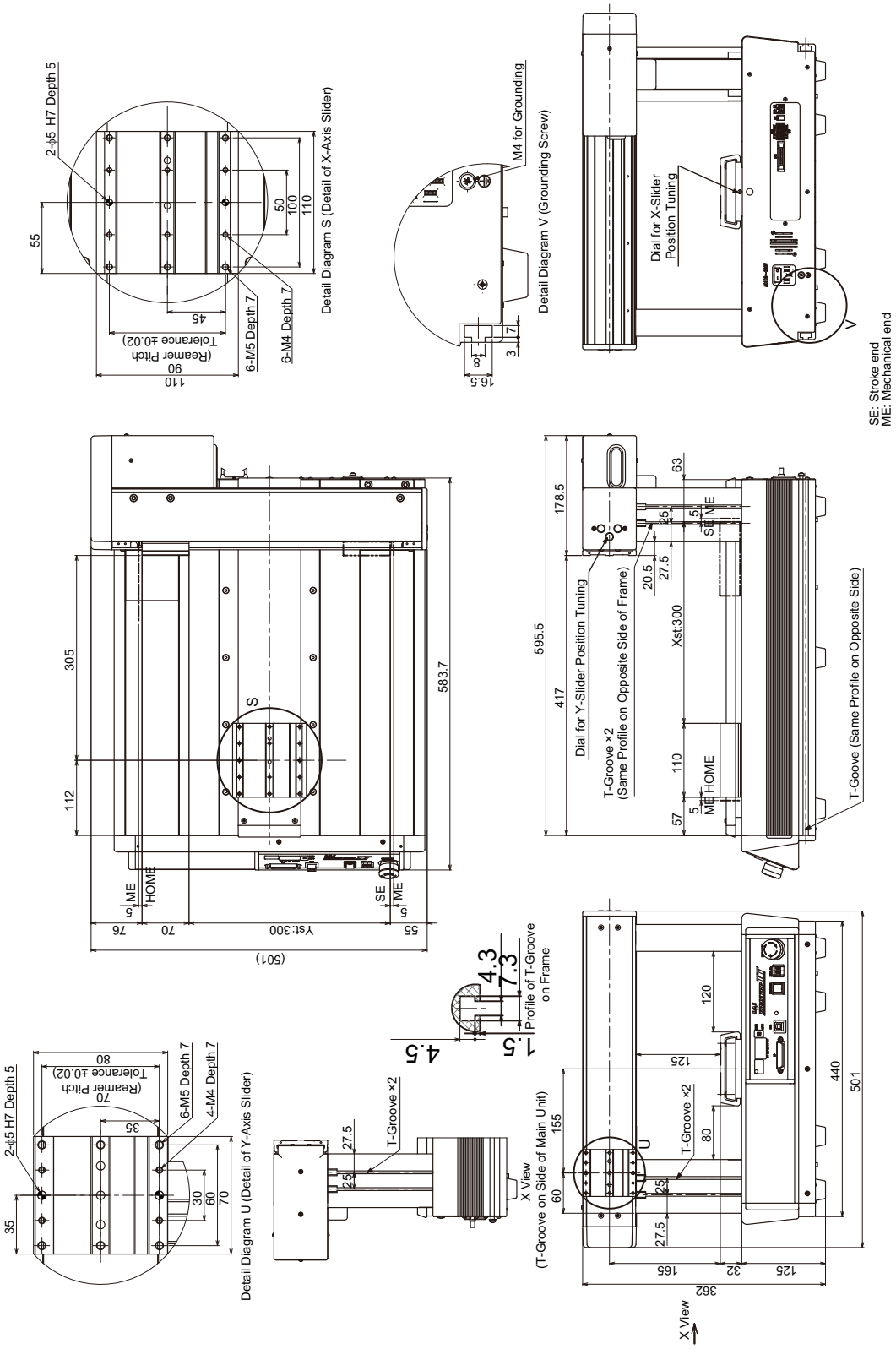

Mass: 31kg

[3] Two-Axis: X & Y-Axes 400mm Stroke

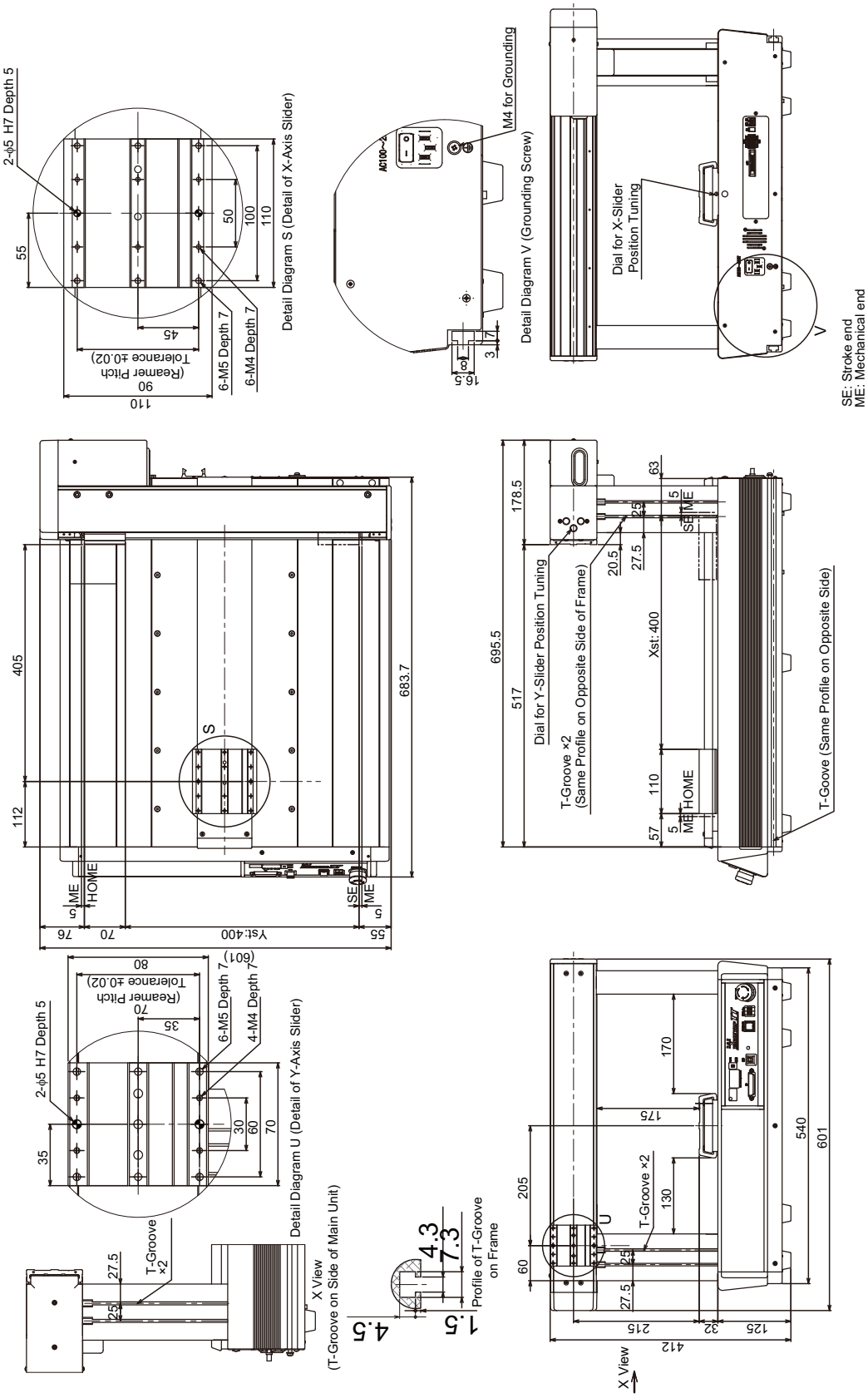

Mass: 37kg

[4] Two-Axis: X & Y-Axes 500mm Stroke

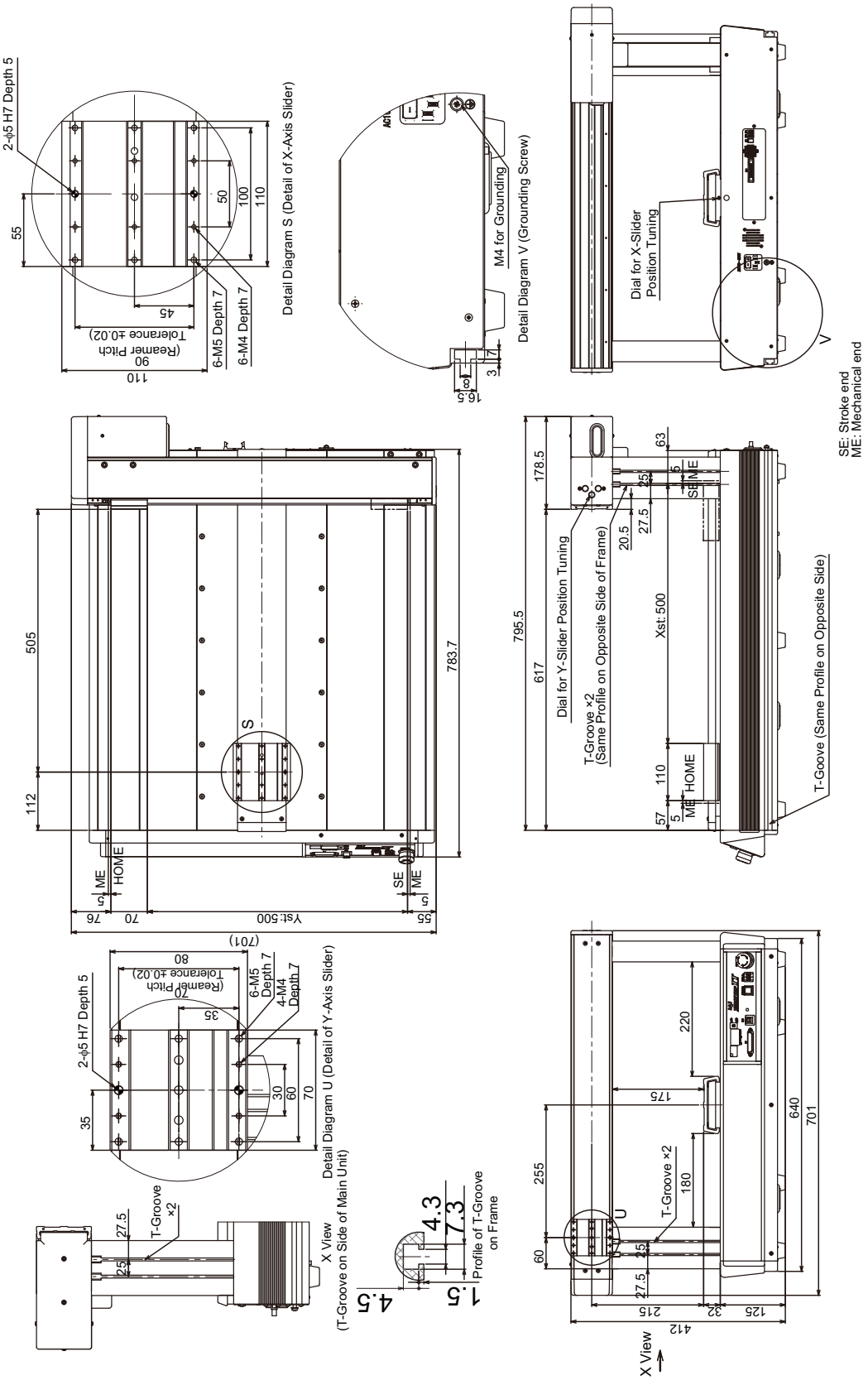

Mass: 44kg

[5] Three-Axis: X & Y-Axes 200mm Stroke, Z- Axis 100mm/150mm Stroke

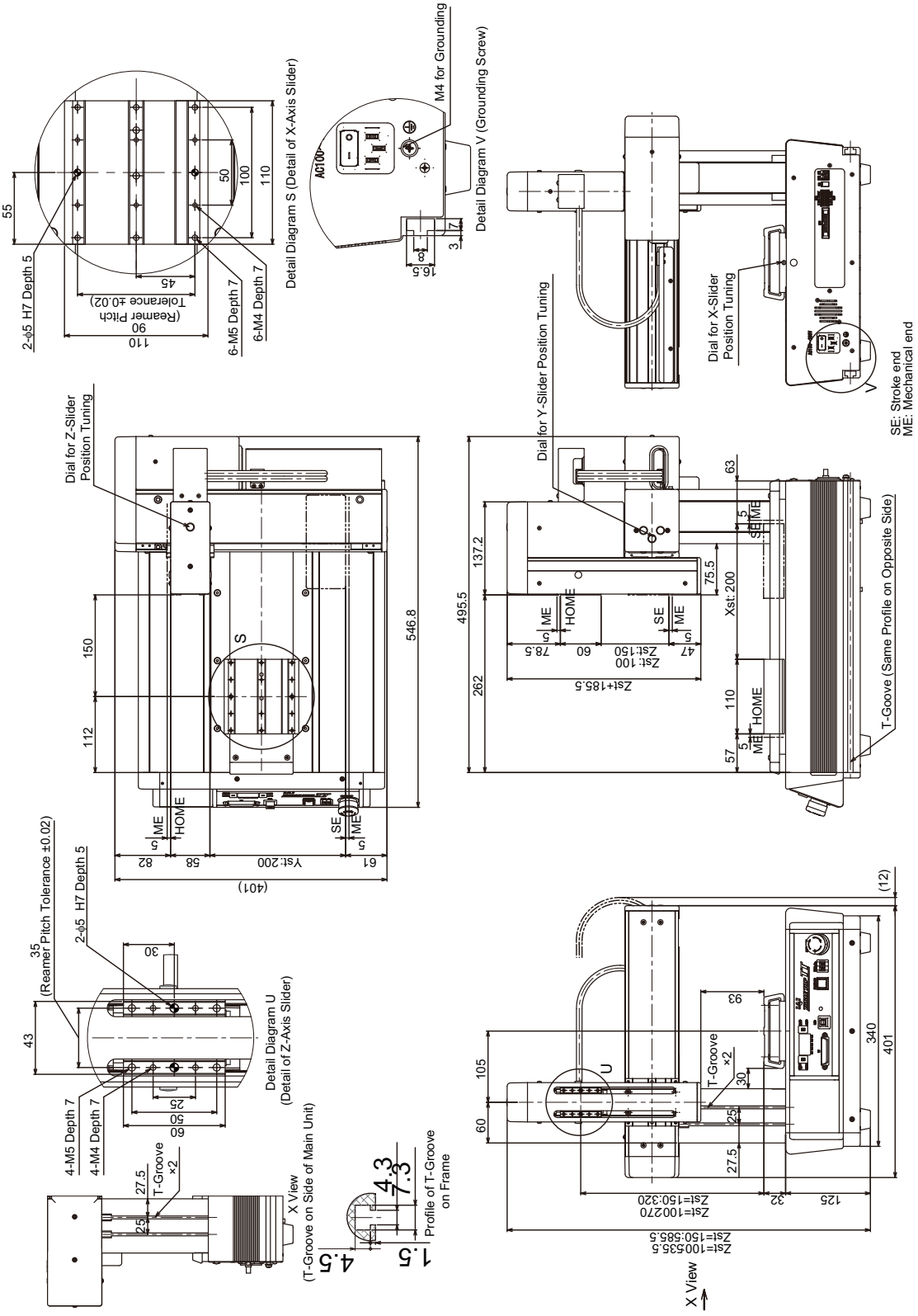

Mass: 27kg

[6] Three-Axis: X & Y-Axes 300mm Stroke, Z- Axis 100mm/150mm Stroke

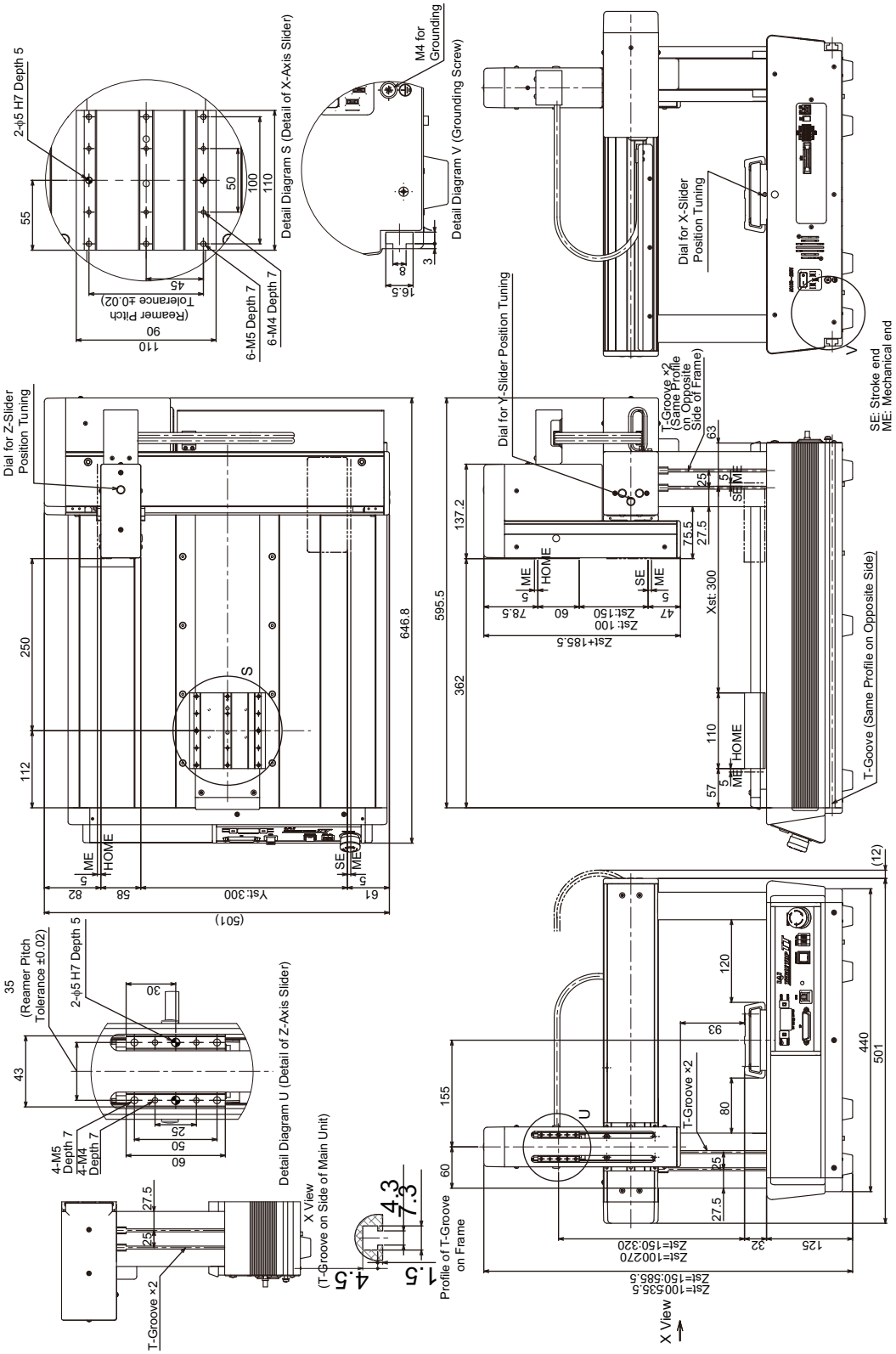

Mass: 34kg

[7] Three-Axis: X & Y-Axes 400mm Stroke, Z- Axis 100mm/150mm Stroke

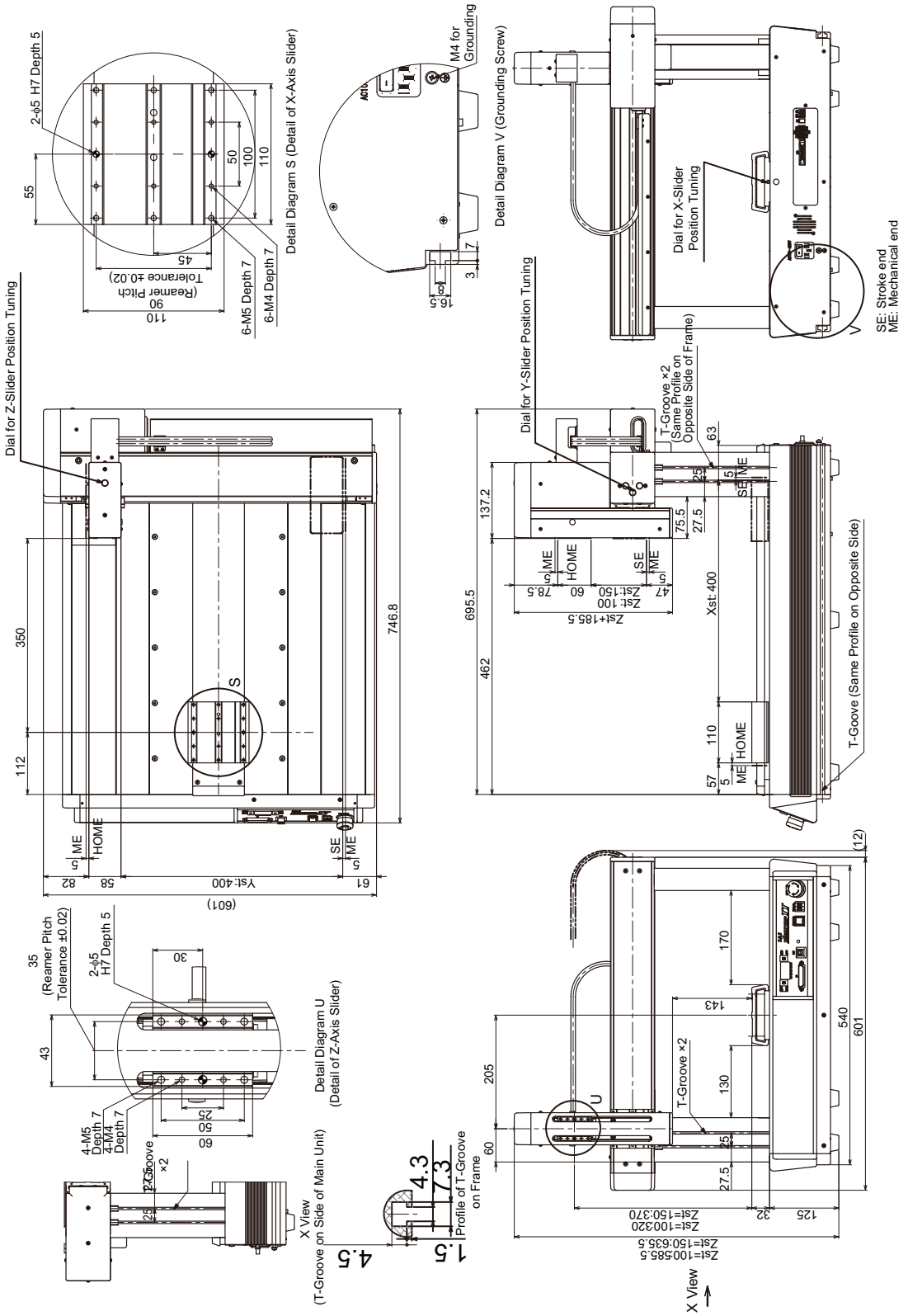

Mass: 40kg

[8] Three-Axis: X & Y-Axes 500mm Stroke, Z- Axis 100mm/150mm Stroke

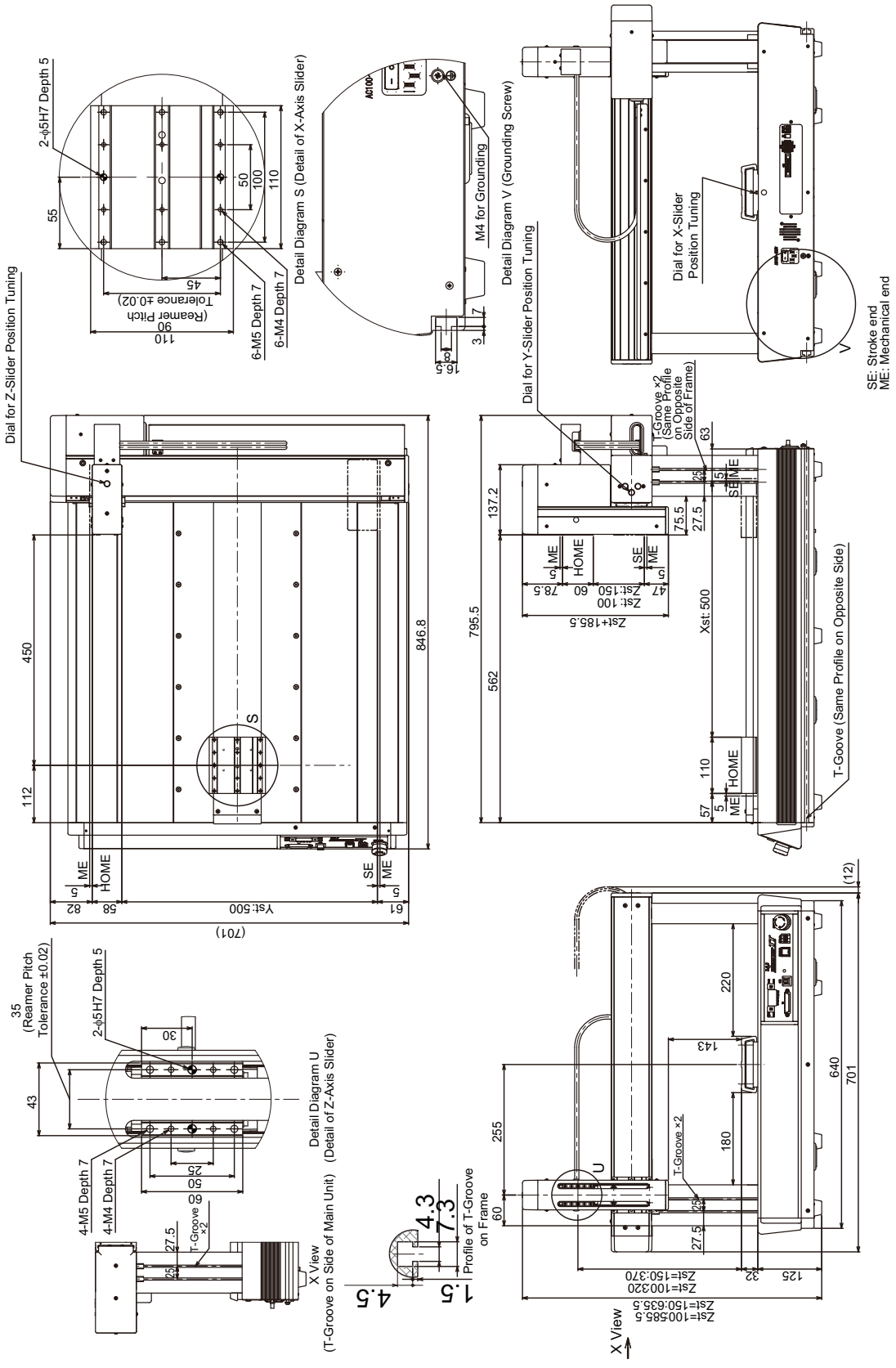

Mass: 47kg

[9] Four-Axis: X & Y-Axes 200mm Stroke, Z- Axis 100mm/150mm Stroke

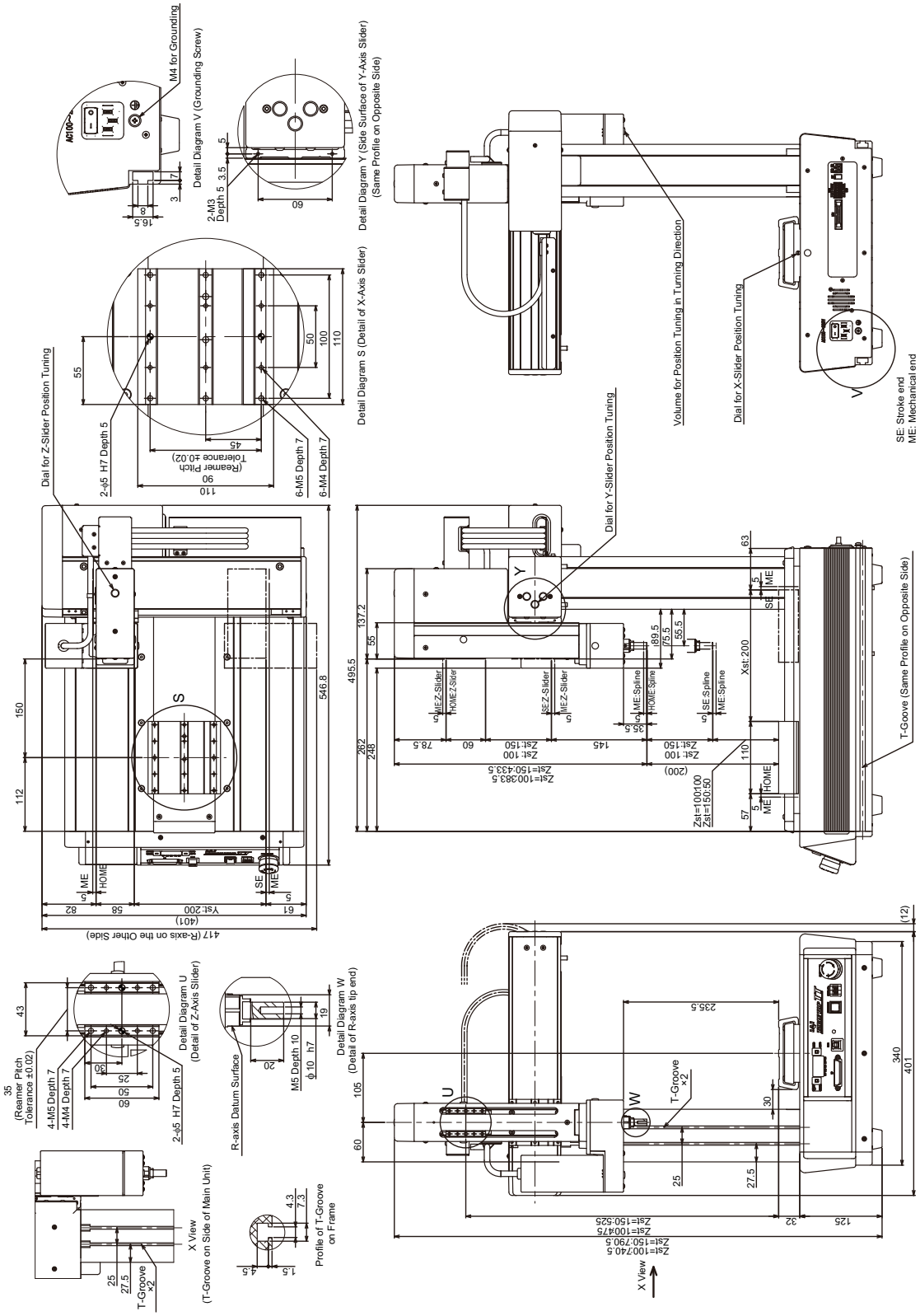

Mass: 28kg

[10] Four-Axis: X & Y-Axes 300mm Stroke, Z- Axis 100mm/150mm Stroke

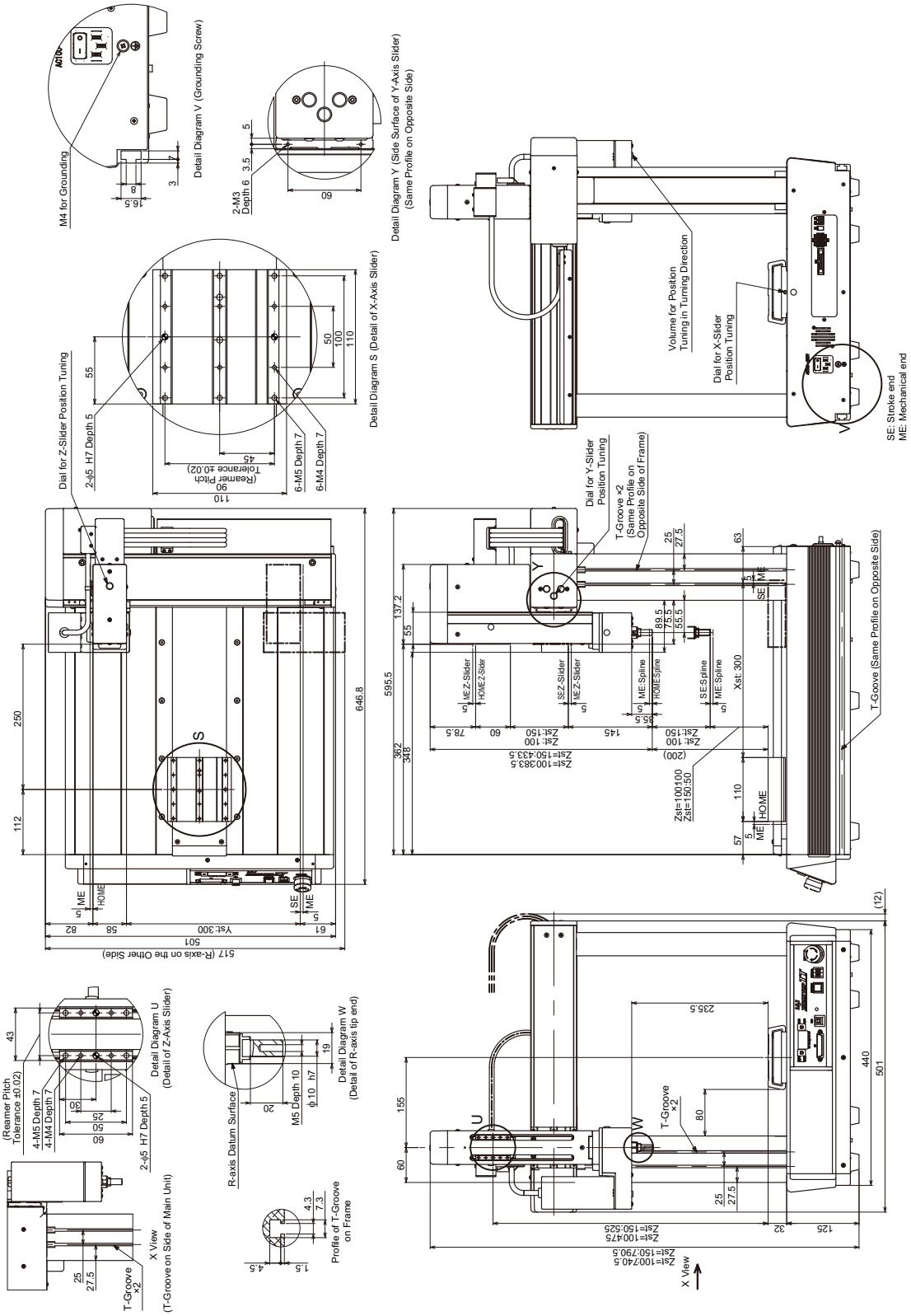

Mass: 35kg

[11] Four-Axis: X & Y-Axes 400mm Stroke, Z- Axis 100mm/150mm Stroke

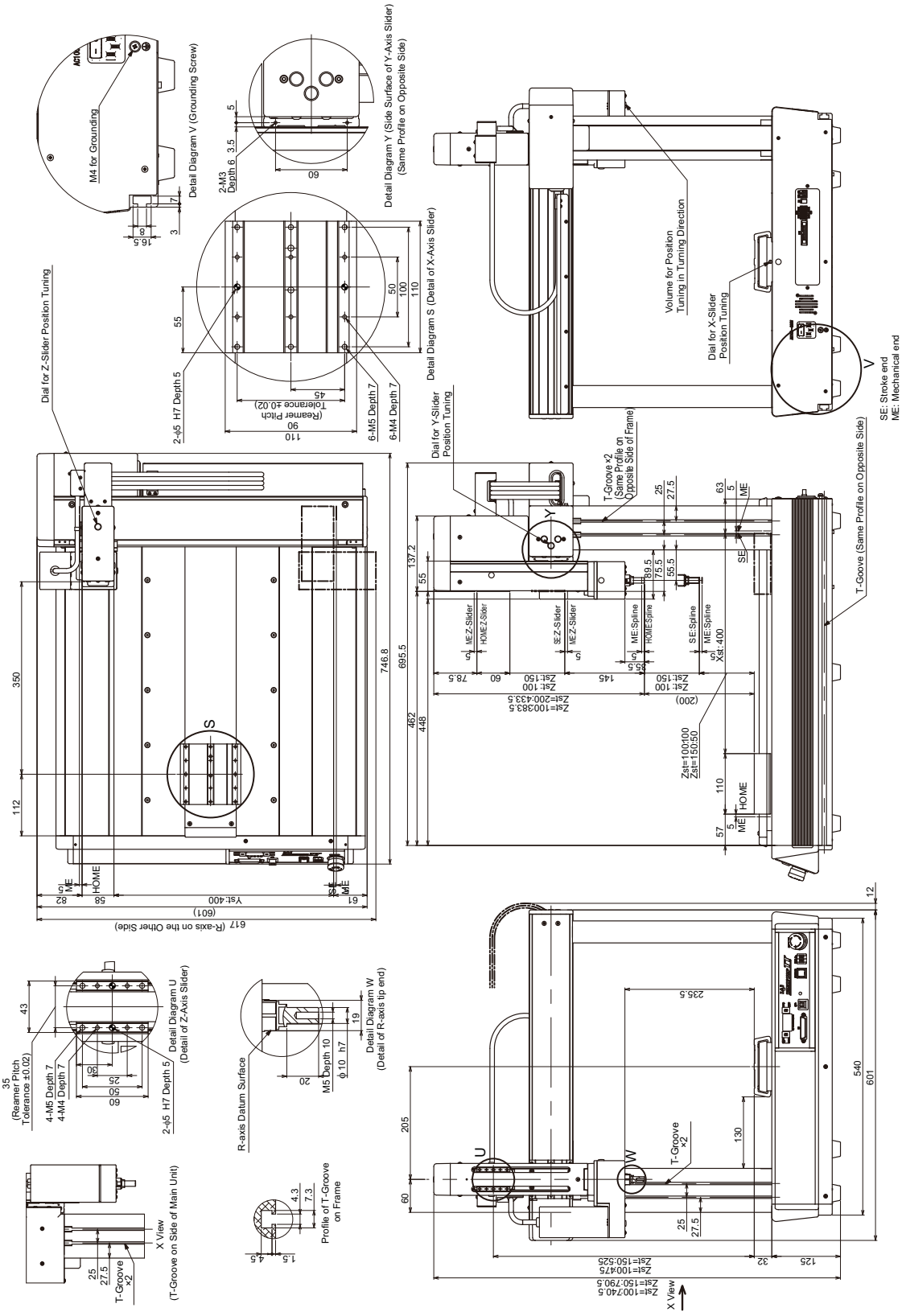

Mass: 41kg

[12] Four-Axis: X & Y-Axes 500mm Stroke,Z- Axis 100mm/150mm Stroke

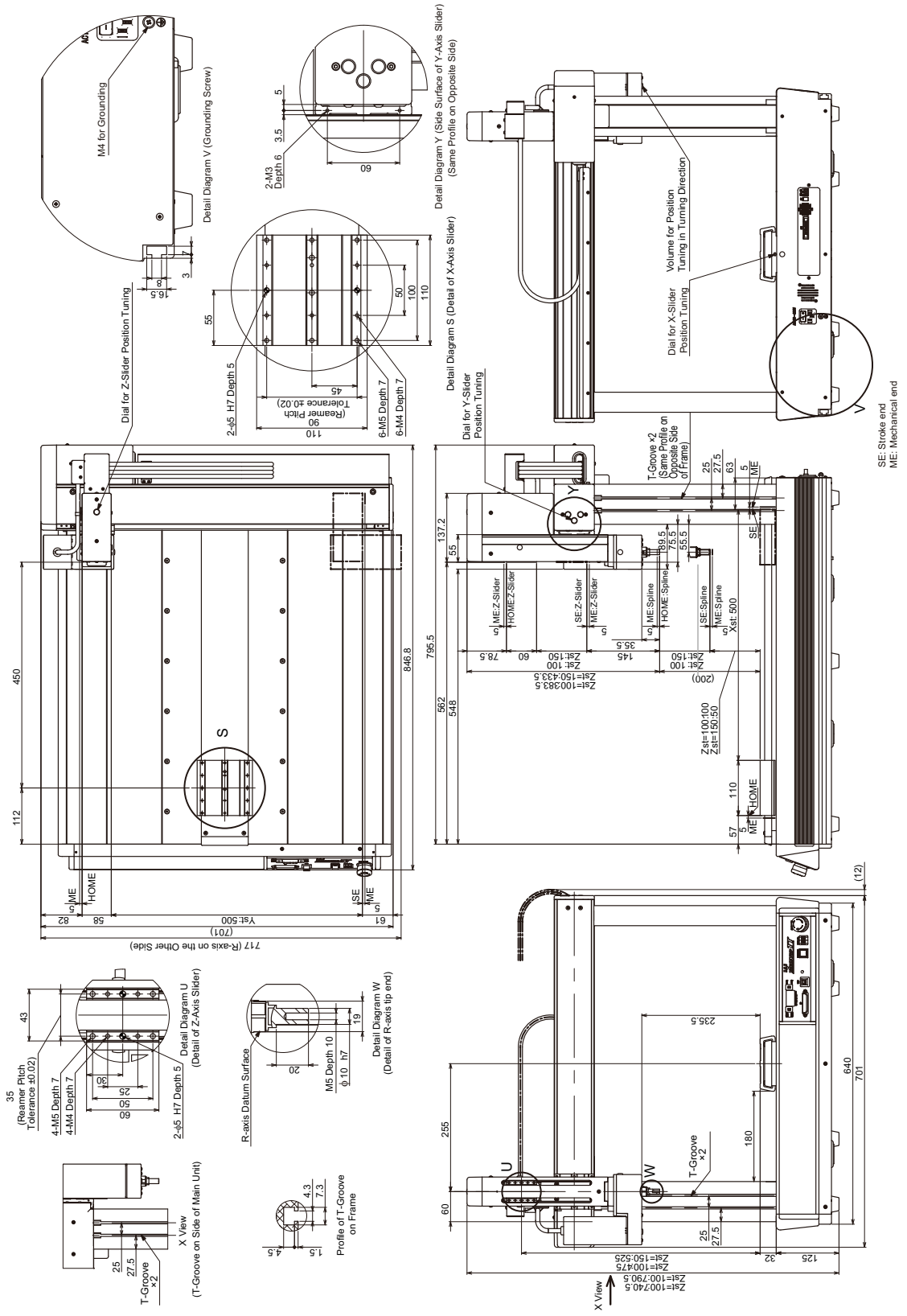

Mass: 48kg

9.2.2 Work Fixing Type

[1] Two-Axis: X-Axis 200mm Stroke, Y-Axis 150mm Stroke

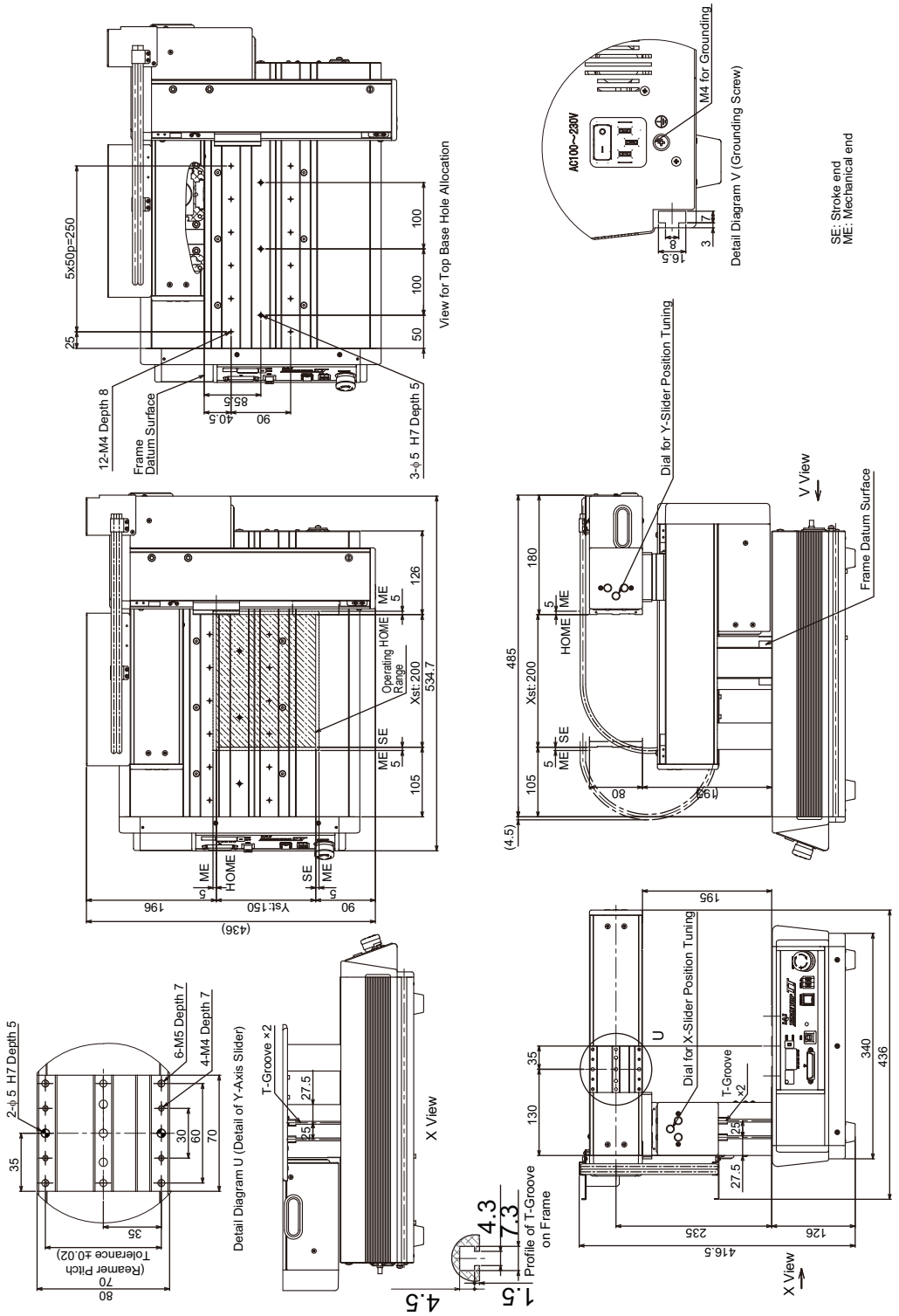

Mass: 25kg

[2] Two-Axis: X-Axis 300mm Stroke, Y-Axis 550mm Stroke

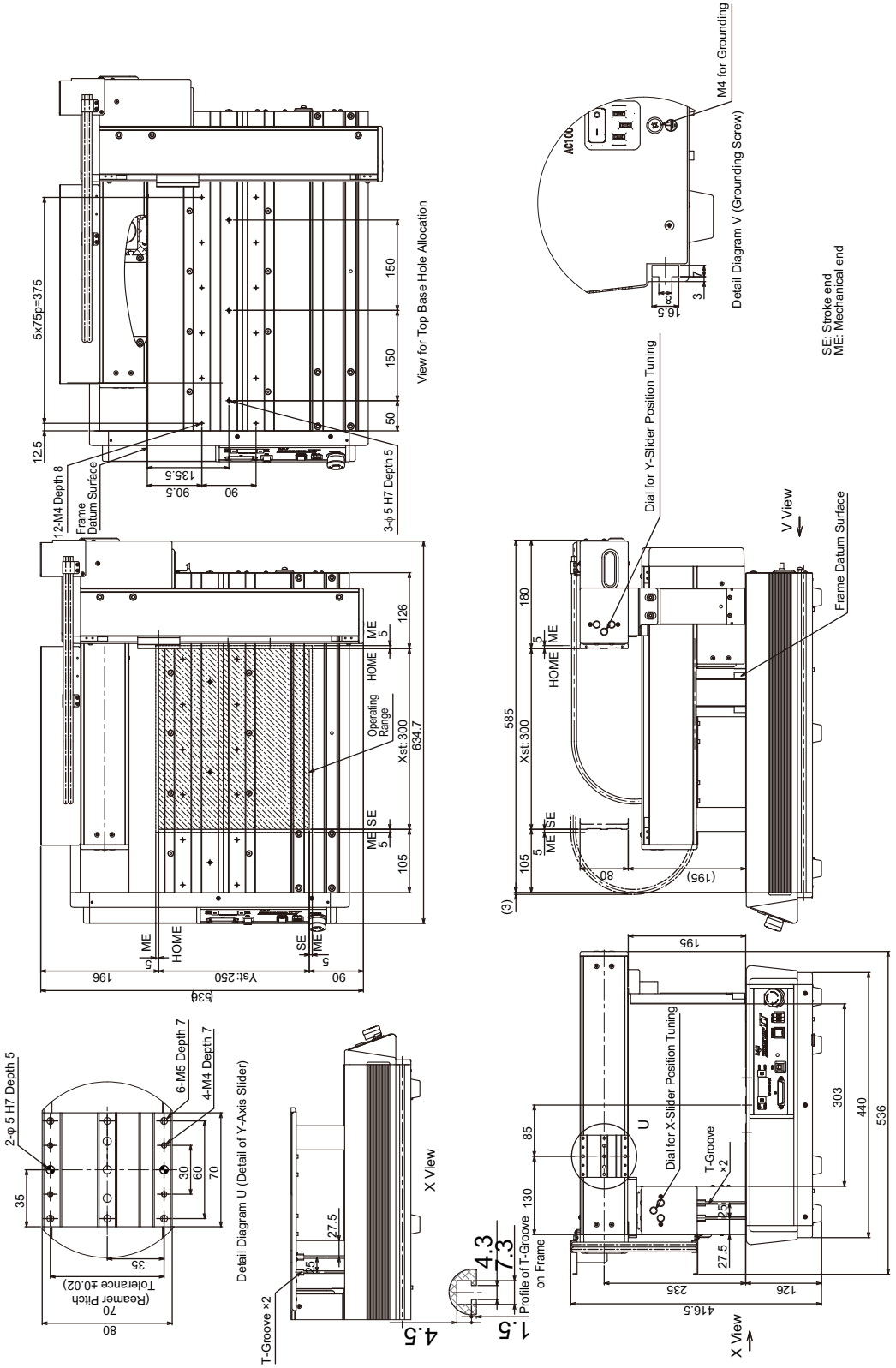

Mass: 33kg

[3] Two-Axis: X-Axis 400mm Stroke, Y-Axis 350mm Stroke

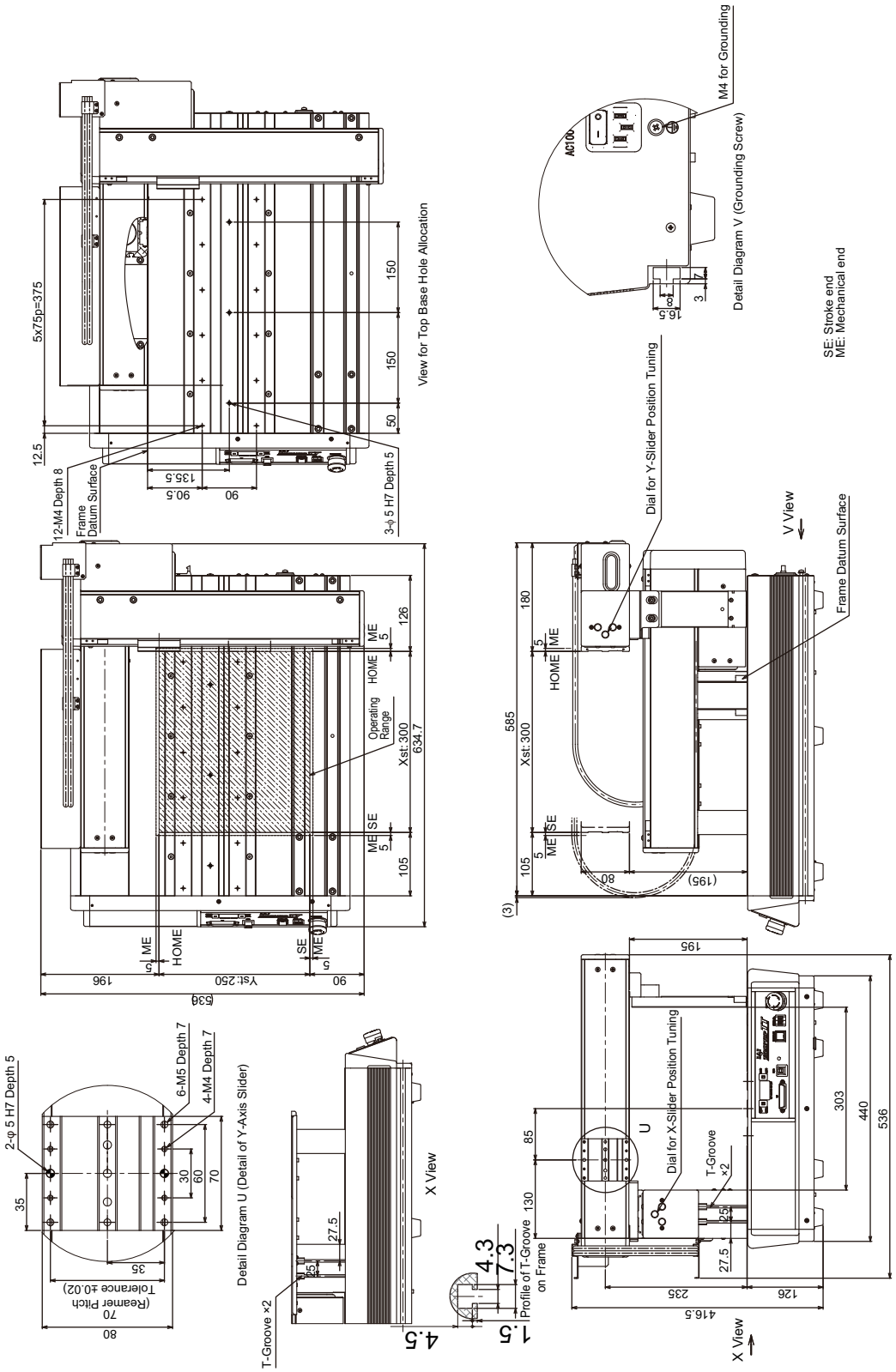

Mass: 40kg

[4] Two-Axis: X-Axis 500mm Stroke, Y-Axis 450mm Stroke

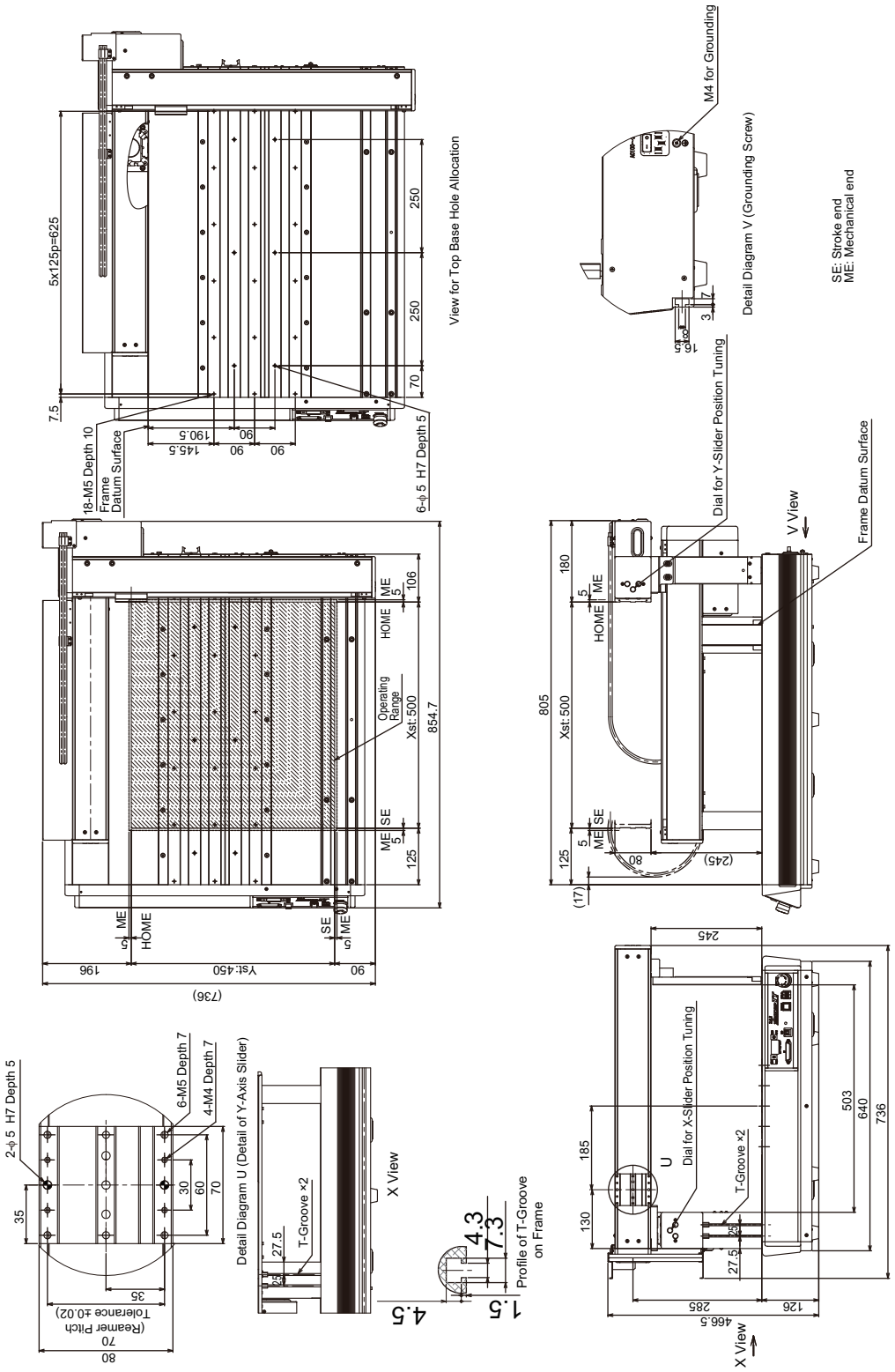

Mass: 47kg

[5] Three-Axis: X-Axis 200mm Stroke, Y-Axis 150mm Stroke, Z-Axis 100mm/150mm Stroke

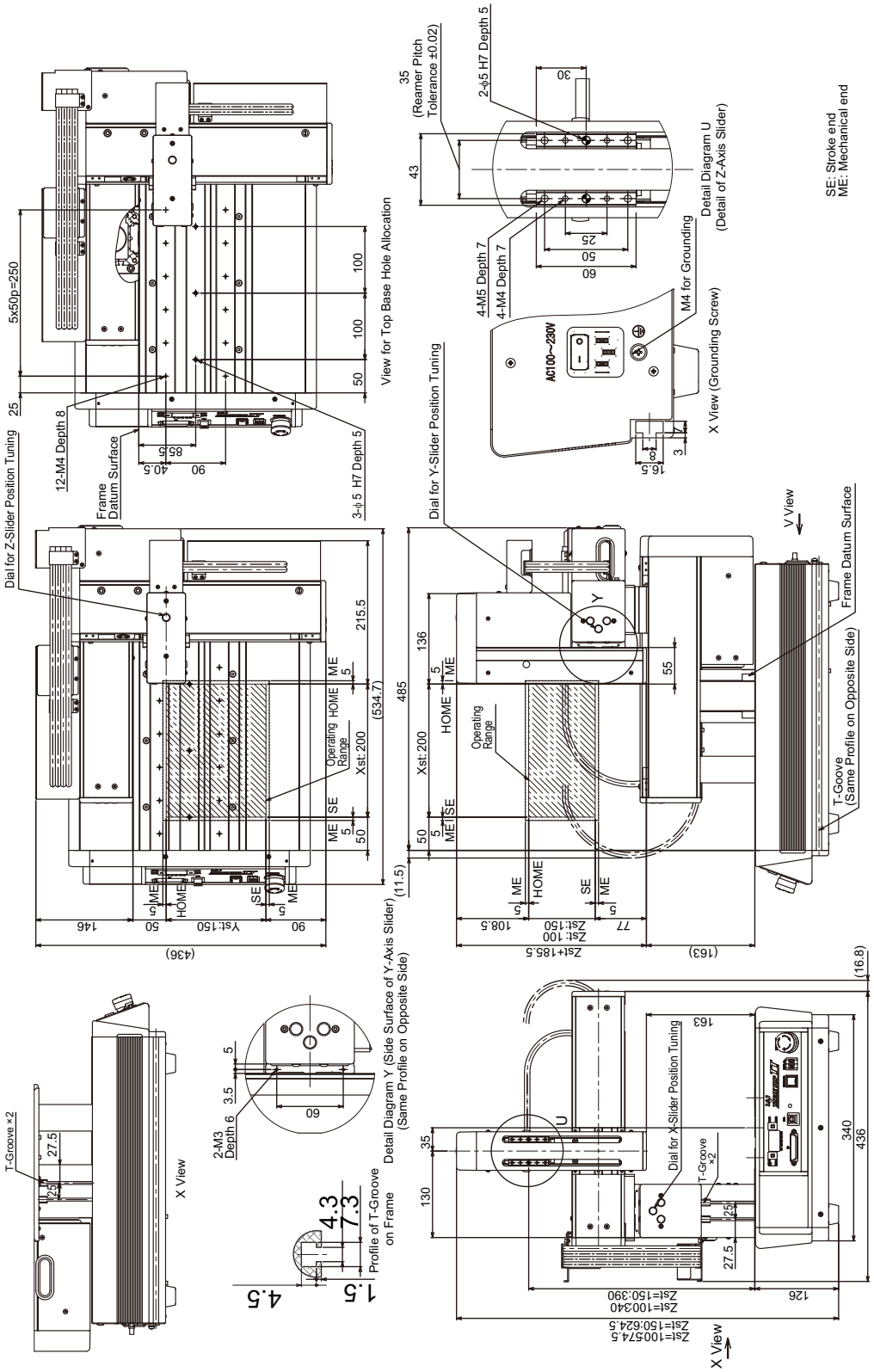

Mass: 29kg

[6] Three-Axis: X-Axis 300mm Stroke, Y-Axis 250mm Stroke, Z-Axis 100mm/150mm Stroke

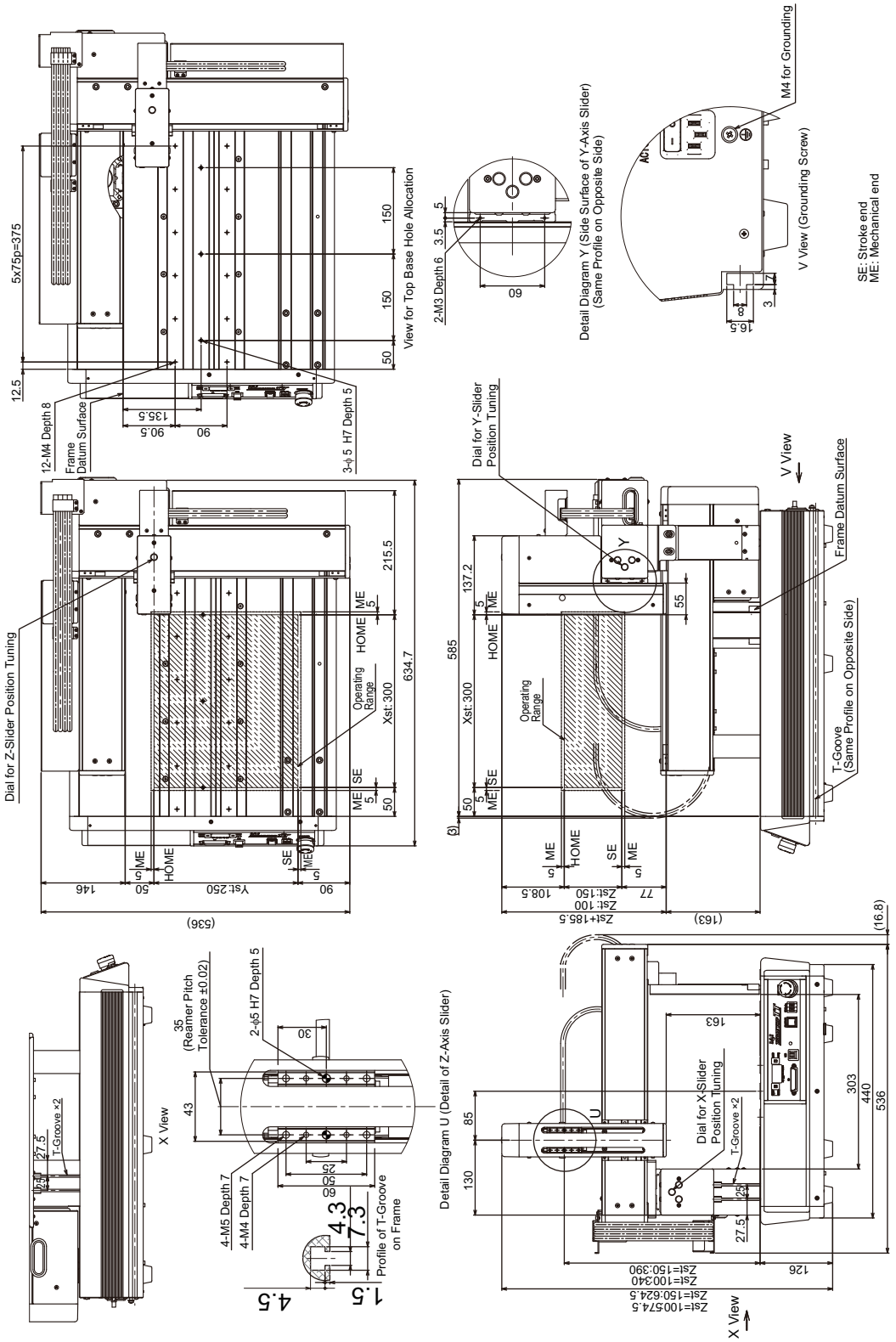

Mass: 37kg

[7] Three-Axis: X-Axis 400mm Stroke, Y-Axis 350mm Stroke, Z-Axis 100mm/150mm Stroke

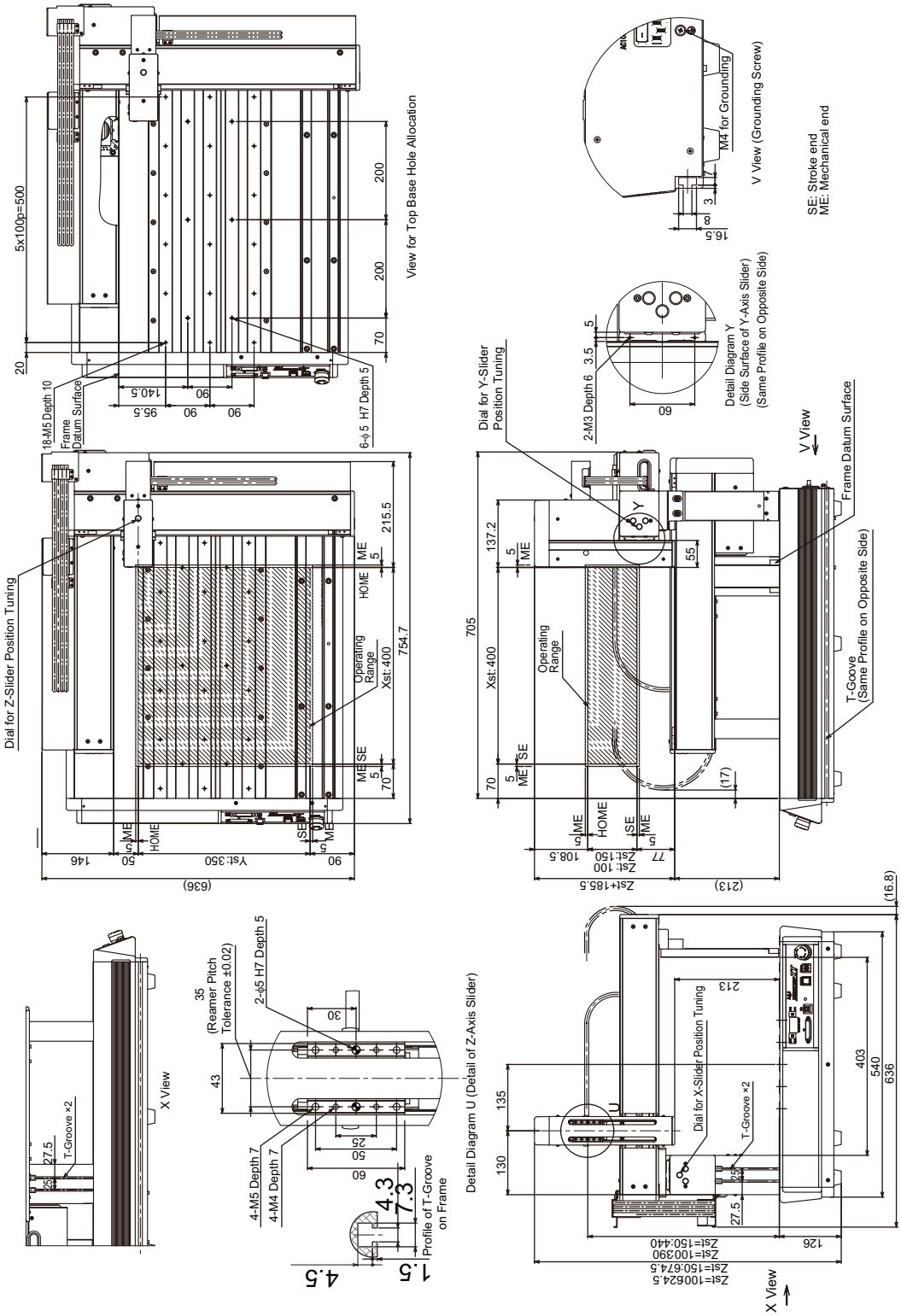

Mass: 44kg

[8] Three-Axis: X-Axis 500mm Stroke, Y-Axis 450mm Stroke, Z-Axis 100mm/150mm Stroke

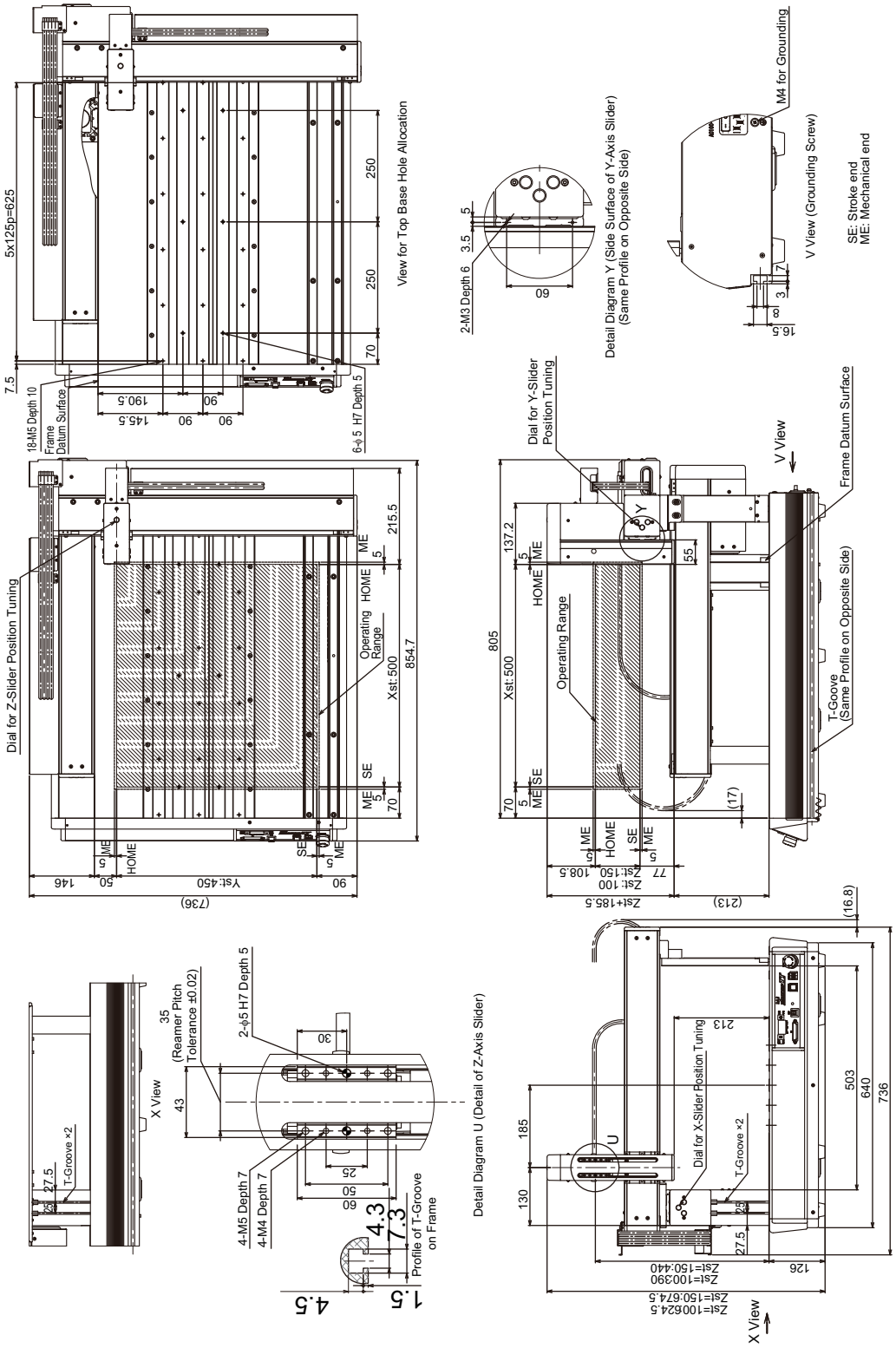

Mass: 51kg

[9] Four-Axis: X-Axis 200mm Stroke, Y-Axis 150mm Stroke, Z-Axis 100mm/150mm Stroke

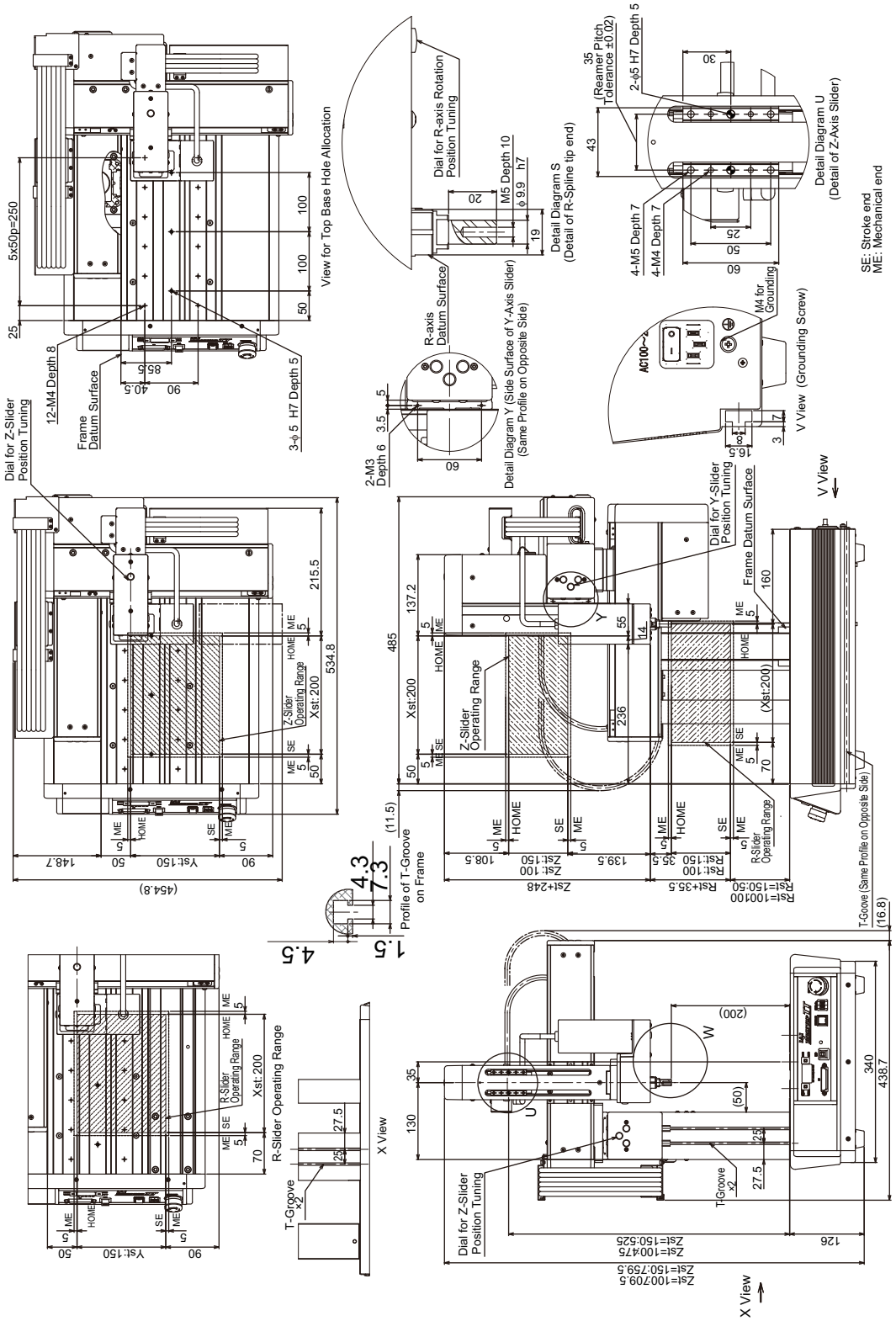

Mass: 36kg

[10] Four-Axis: X-Axis 300mm Stroke, Y-Axis 250mm Stroke, Z-Axis 100mm/150mm Stroke

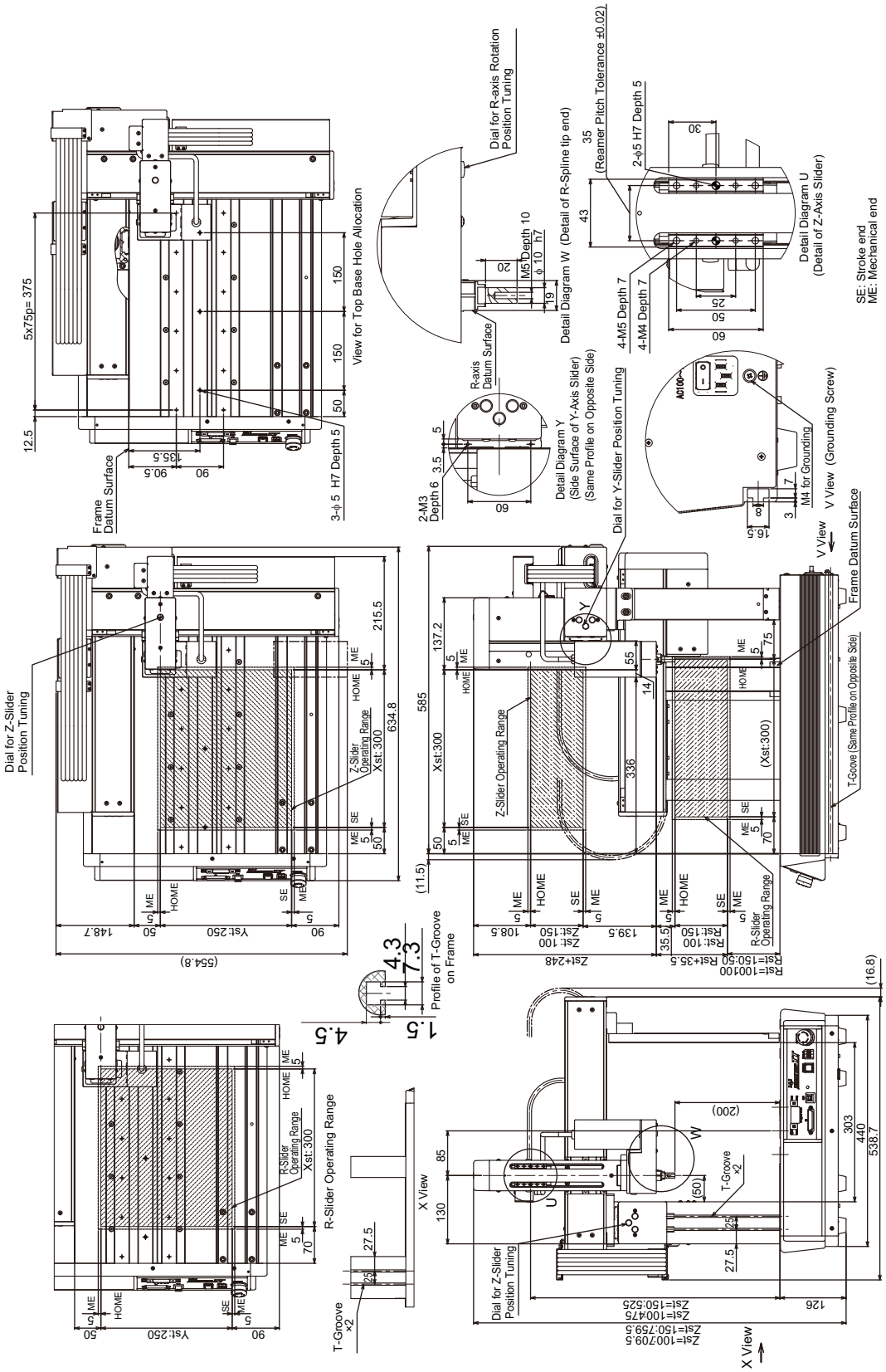

[11] Four-Axis: X-Axis 400mm Stroke, Y-Axis 350mm Stroke, Z-Axis 100mm/150mm Stroke

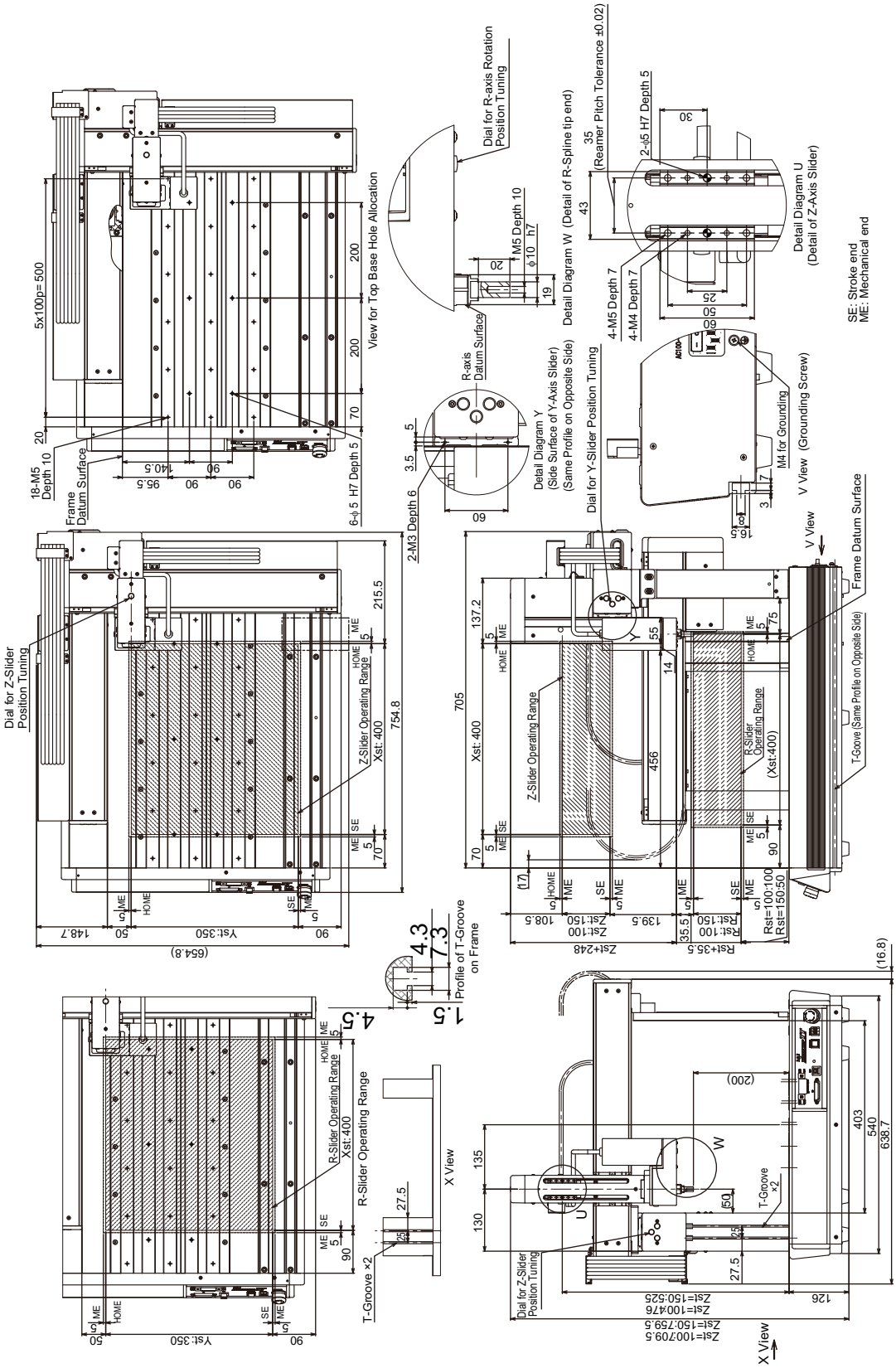

Mass: 48kg

[12] Four-Axis: X-Axis 500mm Stroke, Y-Axis 450mm Stroke, Z-Axis 100mm/150mm Stroke

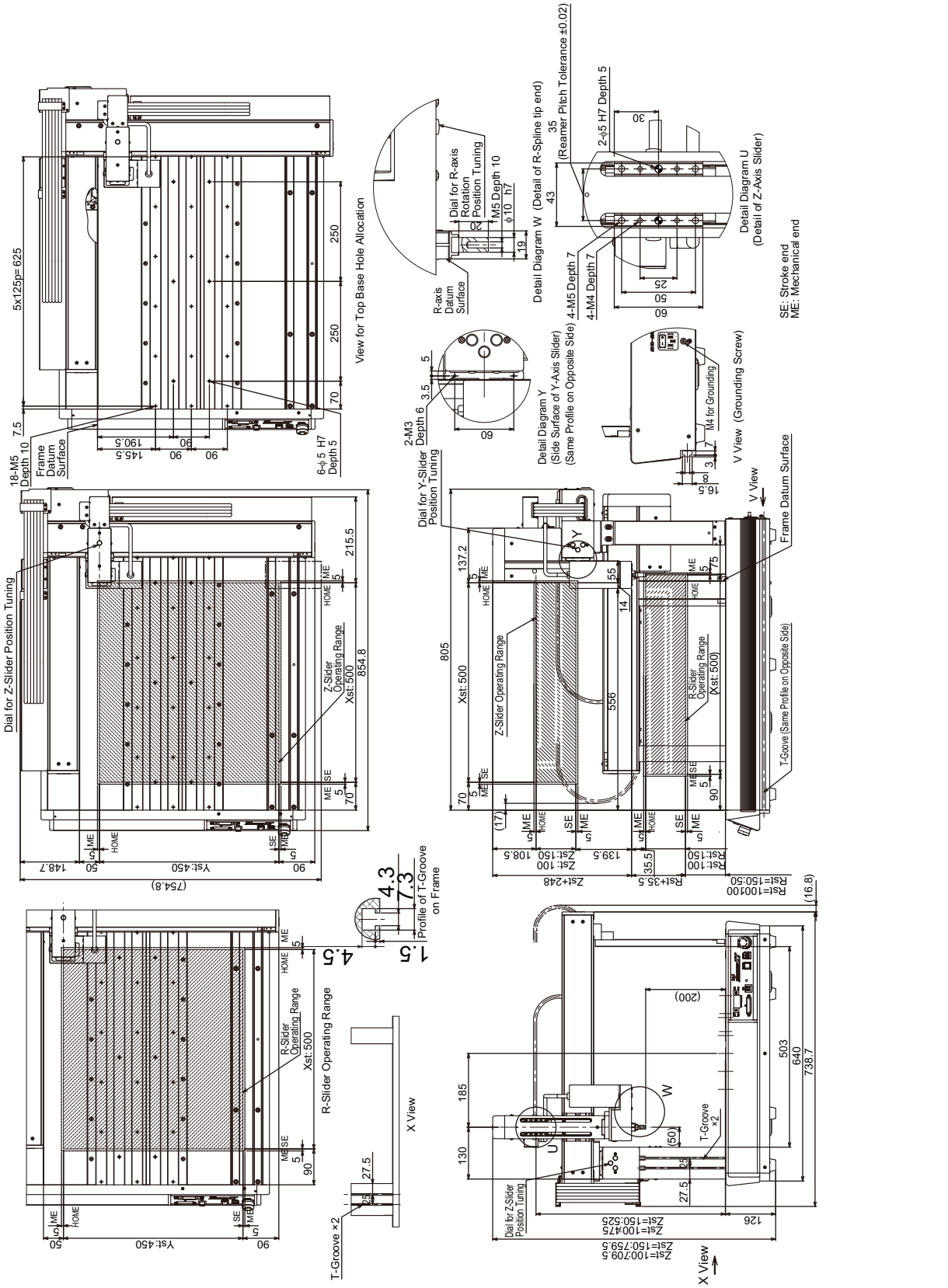

Mass: 56kg

9.3 Option

9.3.1 Work Moving Type

[1] Option

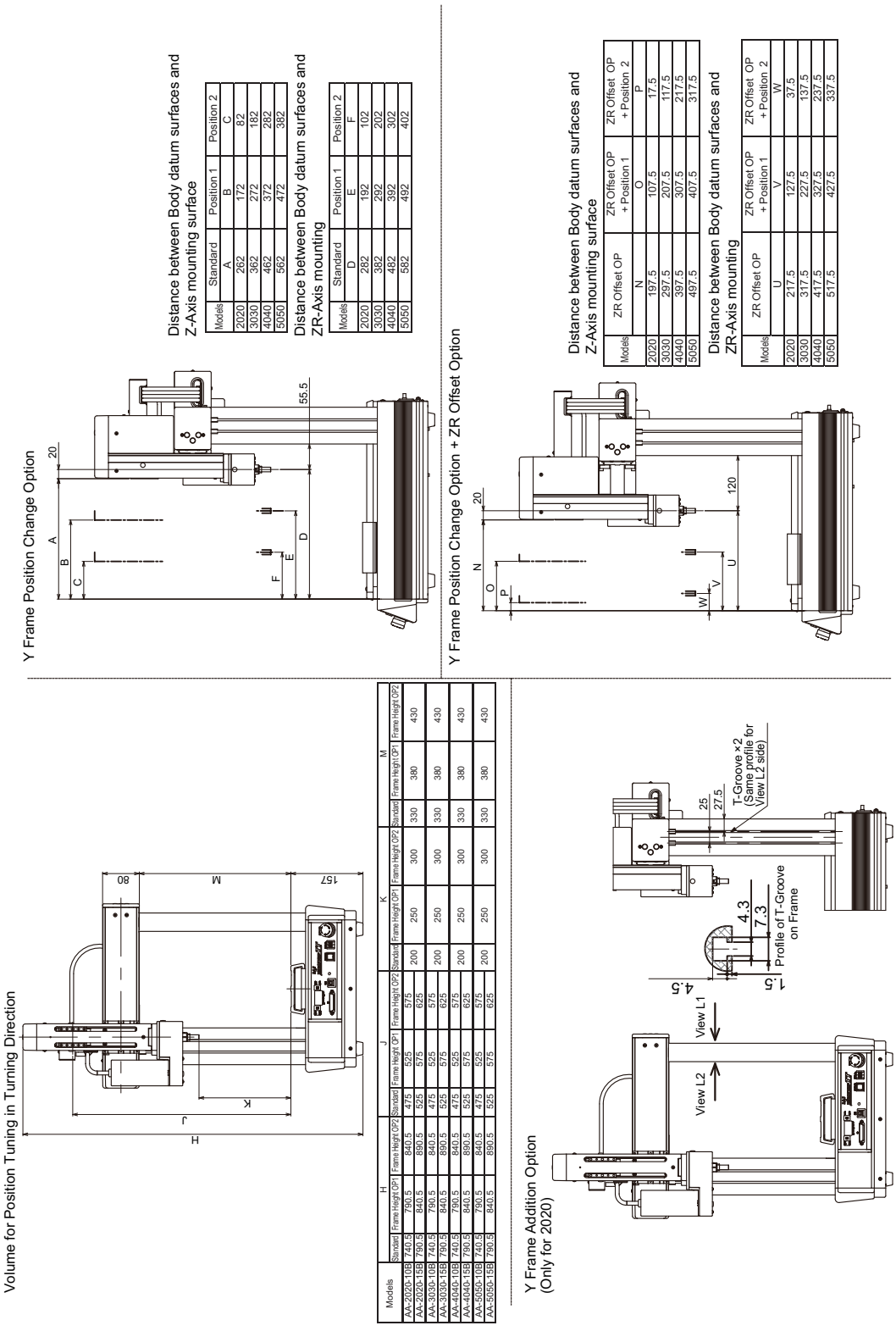

Models	Standard	Position 1	Position 2
	A	B	C
2020	262	172	82
3030	362	272	182
4040	462	372	282
5050	562	472	382

Models	Standard	Position 1	Position 2
	D	E	F
2020	282	192	102
3030	382	292	202
4040	482	392	302
5050	582	492	402

Models	ZR Offset OP	ZR Offset OP + Position 1	ZR Offset OP + Position 2
	N	O	P
2020	197.5	107.5	17.5
3030	297.5	207.5	117.5
4040	397.5	307.5	217.5
5050	497.5	407.5	317.5

Models	ZR Offset OP	ZR Offset OP + Position 1	ZR Offset OP + Position 2
	U	V	W
2020	217.5	127.5	37.5
3030	317.5	227.5	137.5
4040	417.5	327.5	237.5
5050	517.5	427.5	337.5

Models	H		J		K				M	
	Standard	Frame Height OP1	Frame Height OP2	Standard	Frame Height OP1	Frame Height OP2	Standard	Frame Height OP1	Frame Height OP2	Standard	Frame Height OP1	Frame Height OP2
AA-2020-10B	740.5	790.5	840.5	475	525	575	200	250	300	330	380	430
AA-2020-15B	790.5	840.5	890.5	525	575	625						
AA-3030-10B	740.5	790.5	840.5	475	525	575	200	250	300	330	380	430
AA-3030-15B	790.5	840.5	890.5	525	575	625						
AA-4040-10B	740.5	790.5	840.5	475	525	575	200	250	300	330	380	430
AA-4040-15B	790.5	840.5	890.5	525	575	625						
AA-5050-10B	740.5	790.5	840.5	475	525	575	200	250	300	330	380	430
AA-5050-15B	790.5	840.5	890.5	525	575	625						

[2] Frame Option

Y Frame Length Change Option

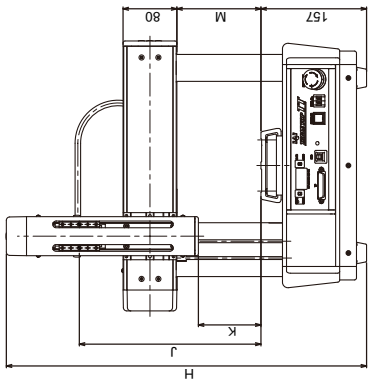

Dimensions for Each Type

Models	H			J			K			M		
	Standard	Frame Height OP1	Frame Height OP2	Standard	Frame Height OP1	Frame Height OP2	Standard	Frame Height OP1	Frame Height OP2	Standard	Frame Height OP1	Frame Height OP2
A2-2020	-	-	-	-	-	-	-	-	-	125	175	225
A3-2020-10B	535.5	585.5	635.5	270	320	370	93	143	193			
A3-2020-15B	585.5	635.5	685.5	320	370	420						
A2-3030	-	-	-	-	-	-	-	-	-	125	175	225
A3-3030-10B	535.5	585.5	635.5	270	320	370	93	143	193			
A3-3030-15B	585.5	635.5	685.5	320	370	420						
A2-4040	-	-	-	-	-	-	-	-	-	175	225	275
A3-4040-10B	585.5	635.5	685.5	320	370	420	143	193	243			
A3-4040-15B	635.5	685.5	735.5	370	420	470						
A2-5050	-	-	-	-	-	-	-	-	-	175	225	275
A3-5050-10B	585.5	635.5	685.5	320	370	420	143	193	243			
A3-5050-15B	635.5	685.5	735.5	370	420	470						

Y Frame Position Change Option

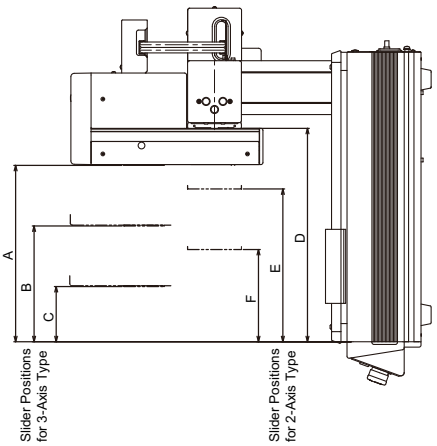

Y Frame Addition Option (Only for 2020)

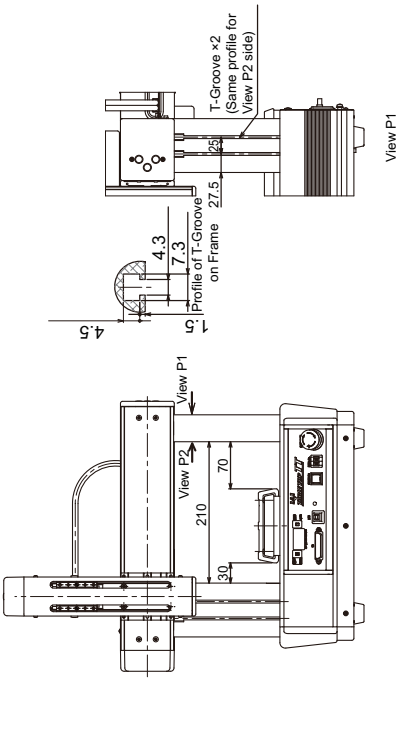

[3] Side Plate Option

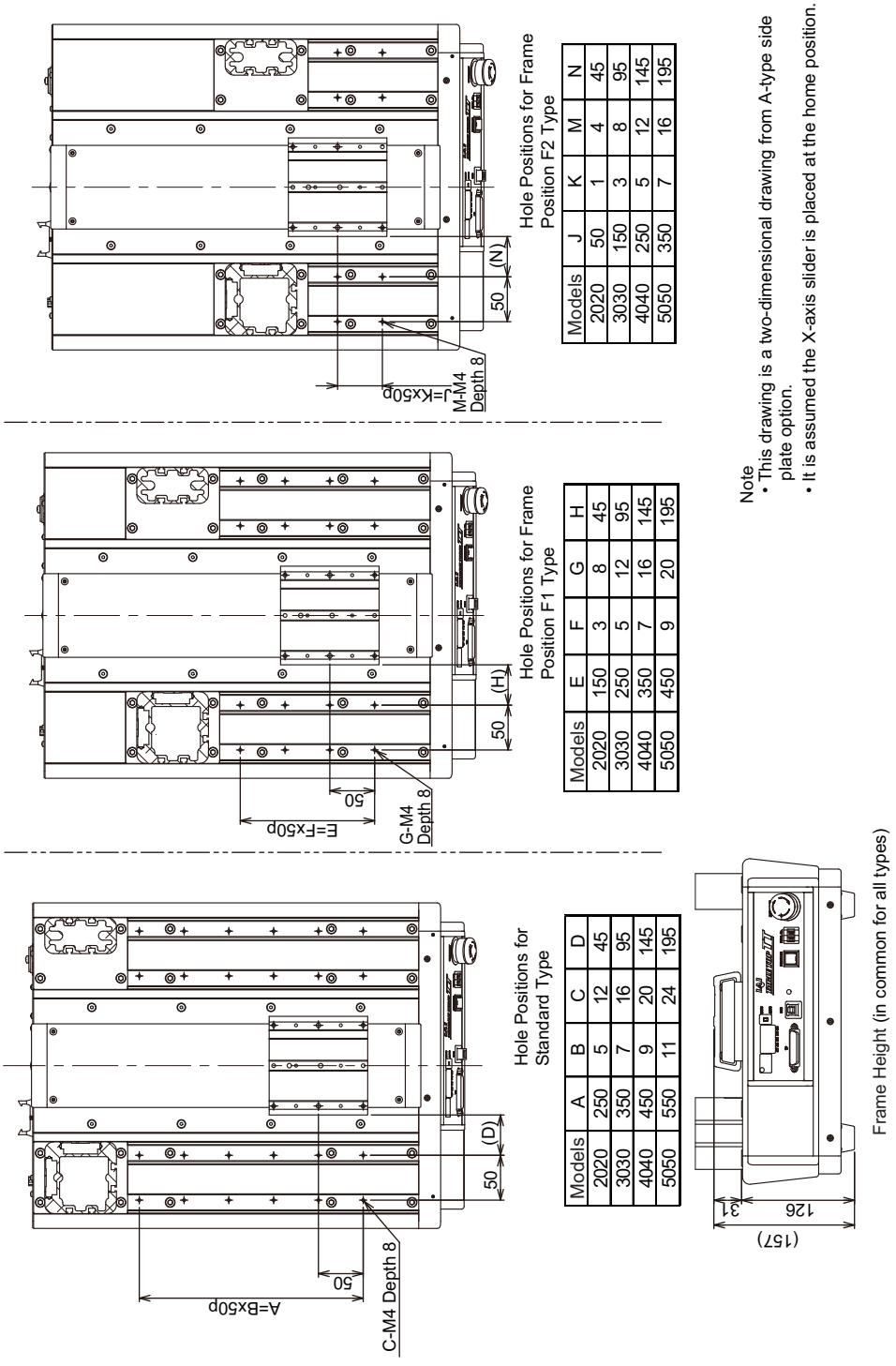

Hole Positions for Frame Position F2 Type

Models	J	K	M	N
2020	50	1	4	45
3030	150	3	8	95
4040	250	5	12	145
5050	350	7	16	195

Hole Positions for Frame Position F1 Type

Models	E	F	G	H
2020	150	3	8	45
3030	250	5	12	95
4040	350	7	16	145
5050	450	9	20	195

Hole Positions for Standard Type

Models	A	B	C	D
2020	250	5	12	45
3030	350	7	16	95
4040	450	9	20	145
5050	550	11	24	195

Note
- This drawing is a two-dimensional drawing from A-type side plate option.
- It is assumed the X-axis slider is placed at the home position.

[4] Side Slot Option

Side View of Type A (in common with Type C)

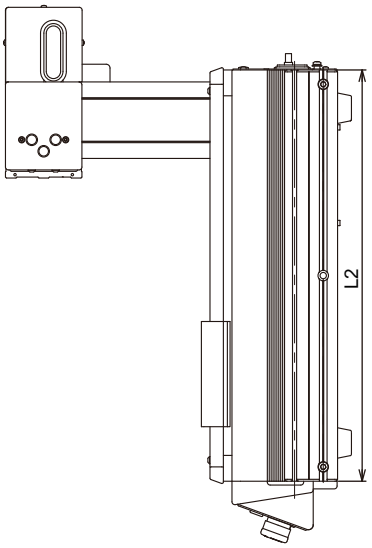

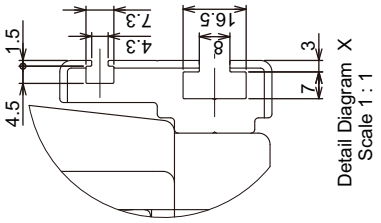

Note
• The side slit part is in common for Type A and Type C

Front View of Type A

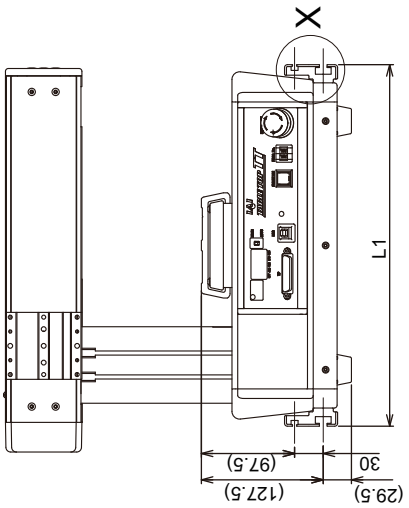

[5] Bracket-Equipped Option

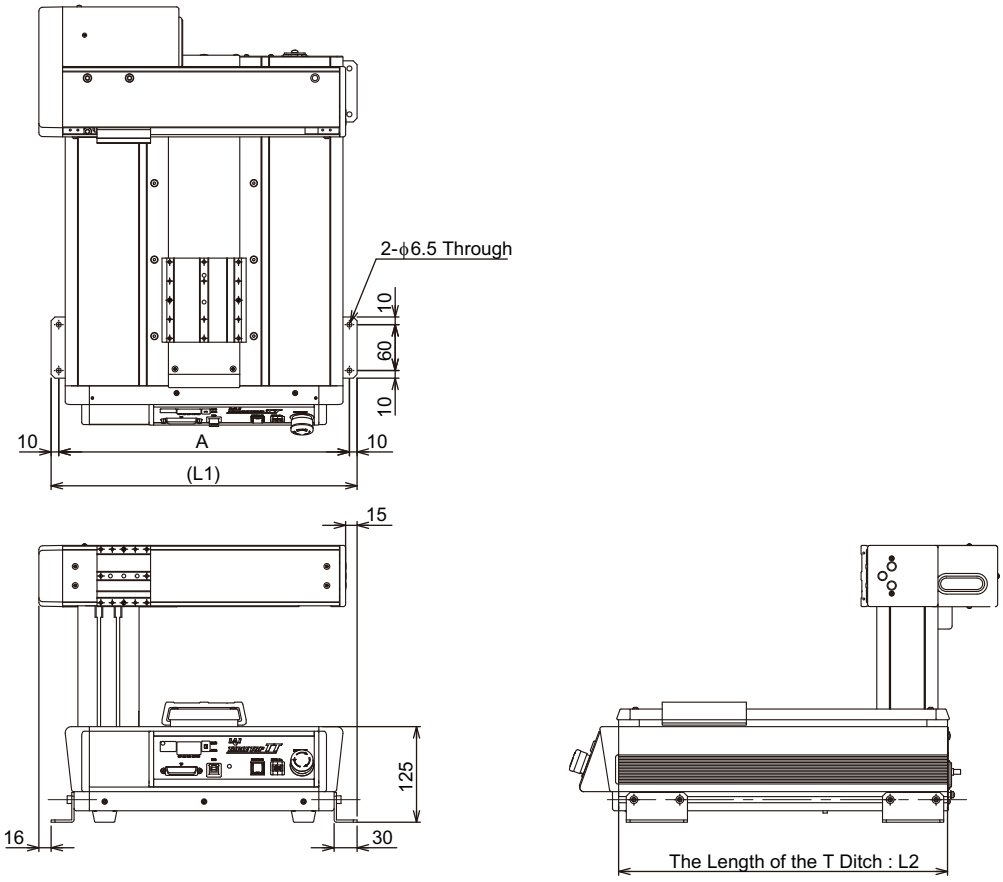

9.3.2 Work Fixing Type

[1] Frame Option

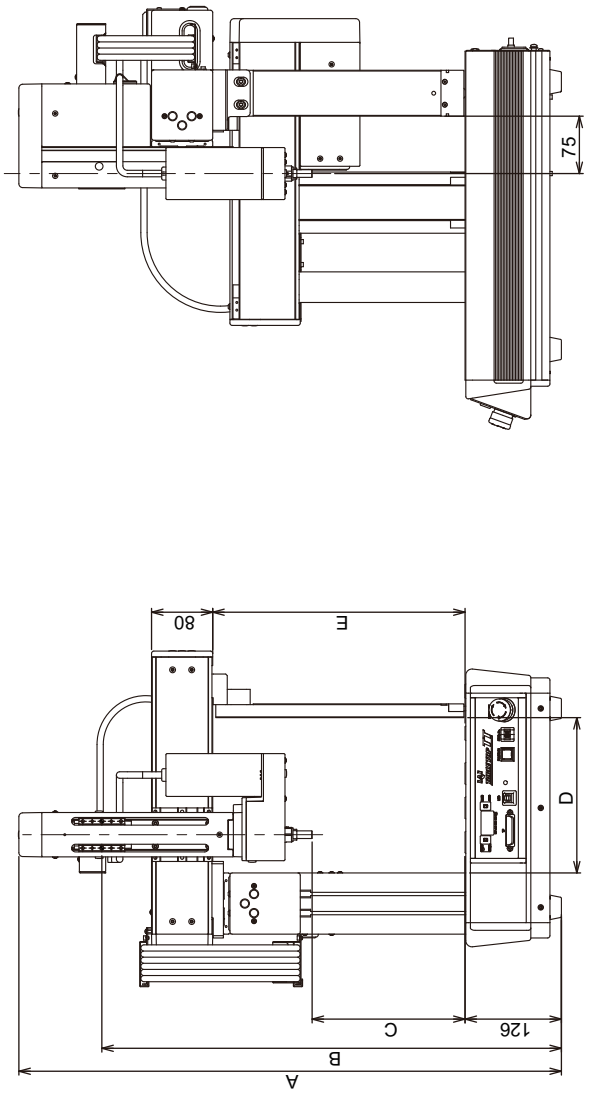

Models	A			B			C			D	E		
	Standard	Frame Height OP1	Frame Height OP2	Standard	Frame Height OP1	Frame Height OP2	Standard	Frame Height OP1	Frame Height OP2		Standard	Frame Height OP1	Frame Height OP2
C2-2015	-	-	-	-	-	-							
C4-2015-10B	709.5	759.5	809.5	601	651	701	200	250	300	203	330	380	430
C4-2015-15B	759.5	809.5	859.5	651	701	751							
C2-3025	-	-	-	-	-	-							
C4-3025-10B	709.5	759.5	809.5	601	651	701	200	250	300	303	330	380	430
C4-3025-15B	759.5	809.5	859.5	651	701	751							
C2-4035	-	-	-	-	-	-							
C4-4035-10B	709.5	759.5	809.5	601	651	701	200	250	300	403	330	380	430
C4-4035-15B	759.5	809.5	859.5	651	701	751							
C2-5045	-	-	-	-	-	-							
C2-5045-10B	709.5	759.5	809.5	601	651	701	200	250	300	503	330	380	430
C4-5045-15B	759.5	809.5	859.5	651	701	751							

* The values in A, B, C and E are the same no matter of the stroke for X-axis and Y-axis.

[2] Side Slot Option

Side View of Type C (in common with Type A)

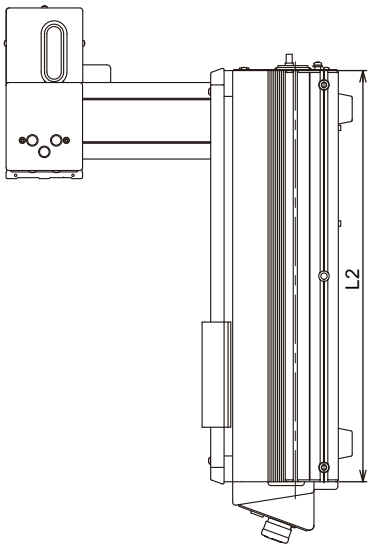

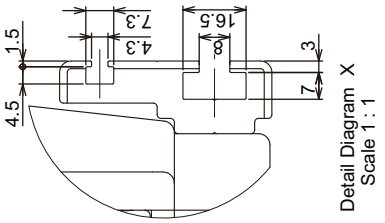

Note
• The side slit part is in common for Type A and Type C

Front View of Type C

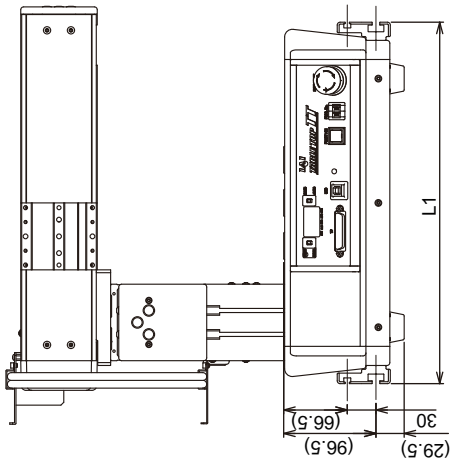

Chapter 10 Life

Operation distance of 5,000km on either of the axis X, Y or Z is a reference.

* It is under assumption of operation in the maximum value of the dynamic allowable moment.

Chapter 11 Warranty

11.1 Warranty Period

One of the following periods, whichever is shorter:
- 18 months after shipment from our company
- 12 months after delivery to the specified location
- 2,500 operational hours

11.2 Scope of the Warranty

Our products are covered by warranty when all of the following conditions are met. Faulty products covered by warranty will be replaced or repaired free of charge:

(1) The breakdown or problem in question pertains to our product as delivered by us or our authorized dealer.

(2) The breakdown or problem in question occurred during the warranty period.

(3) The breakdown or problem in question occurred while the product was in use for an appropriate purpose under the conditions and environment of use specified in the operation manual and catalog.

(4) The breakdown or problem in question was caused by a specification defect or problem, or by the poor quality of our product.

Note that breakdowns due to any of the following reasons are excluded from the scope of warranty:
[1] Anything other than our product
[2] Modification or repair performed by a party other than us (unless we have approved such modification or repair)
[3] Anything that could not be easily predicted with the level of science and technology available at the time of shipment from our company
[4] A natural disaster, man-made disaster, incident or accident for which we are not liable
[5] Natural fading of paint or other symptoms of aging
[6] Wear, depletion or other expected result of use
[7] Operation noise, vibration or other subjective sensation not affecting function or maintenance

Note that the warranty only covers our product as delivered and that any secondary loss arising from a breakdown of our product is excluded from the scope of warranty.

11.3 Honoring the Warranty

As a rule, the product must be brought to us for repair under warranty.

11.4 Limited Liability

(1) We shall assume no liability for any special damage, consequential loss or passive loss such as a loss of expected profit arising from or in connection with our product.
(2) We shall not be liable for any program or control method created by the customer to operate our product or for the result of such program or control method.

11.5 Conditions of Conformance with Applicable Standards/Regulations, Etc., and Applications

(1) If our product is combined with another product or any system, device, etc., used by the customer, the customer must first check the applicable standards, regulations and/or rules. The customer is also responsible for confirming that such combination with our product conforms to the applicable standards, etc. In such a case we will not be liable for the conformance of our product with the applicable standards, etc.

(2) Our product is for general industrial use. It is not intended or designed for the applications specified below, which require a high level of safety. Accordingly, as a rule our product cannot be used in these applications. Contact us if you must use our product for any of these applications:

[1] Medical equipment pertaining to maintenance or management of human life or health
[2] A mechanism or mechanical equipment intended to move or transport people (such as a vehicle, railway facility or aviation facility)
[3] Important safety parts of mechanical equipment (such as safety devices)
[4] Equipment used to handle cultural assets, art or other irreplaceable items

(3) Contact us at the earliest opportunity if our product is to be used in any condition or environment that differs from what is specified in the catalog or operation manual.

11.6 Other Items Excluded from Warranty

The price of the product delivered to you does not include expenses associated with programming, the dispatch of engineers, etc. Accordingly, a separate fee will be charged in the following cases even during the warranty period:

[1] Guidance for installation/adjustment and witnessing of test operation
[2] Maintenance and inspection
[3] Technical guidance and education on operating/wiring methods, etc.
[4] Technical guidance and education on programming and other items related to programs

Change History

Revision Date	Revision Description
2013.10	1st Edition
2013.12	2nd Edition P15 <How to Take off Front Panel> added P21 “Instruction Manuals Related to This Product, which are Contained in the Instruction Manual (DVD).” Touch Panel Teaching TB-01 added Note added for Teaching Pendant SEL-T/TD/TG Teaching Pendant IA-T-X/XD deleted P22 “1.1.4 How to Read the Model” <Options> FT4 and FT6 added <Power Supply Cable Specifications> Bare cut cable end added P31 “1.3 Product Check” Motor power capacity added P40 “1.4.2 Equipment Options” [2] Main-Unit Bracket-Equipped Type (Model: FT4, FT6) added P50 “3.2.2 Example for Composition of Emergency Stop and Enable Circuits” “[2] Example for Wiring when External Switch (with Reset Switch) Installed” Caution added. P51 “[3] Emergency Stop and Enable Circuits: Example for Wiring Considering Safety Category 1” Change made from “Dummy Plug: DP-1” to “Dummy Plug: DP-2” in figure Caution added. P52 “[4] Emergency Stop and Enable Circuits: Example for Wiring Considering Safety Category 2” Change made from “Dummy Plug: DP-1” to “Dummy Plug: DP-2” in figure Caution added. P69 “Teaching tool” Teaching Pendant IA-T-X/XD deleted P79 to P82 “4.6 How to Use Internal DIO” added P83 to P86 “4.7 Standard Interface (Version V0.19 or later for the main application part)” added

Revision Date	Revision Description
2014.09	3rd Edition Cantilever (Cantilever) Type added For 4-axis specifications added
2015.07	4th Edition P23 Correction made to R-Axis stroke model P74 Correction made to cable model P179 Model code change grease to apply an equivalent
2016.01	5th Edition AC Servo Motor Type and Battery-less Absolute Specification added
2016.04	6th Edition “Chapter 3 Wiring” “3.4.6 Wiring for SIO Module Communication Cable” added “Chapter 7 Appendix” “7.2 About Extended SIO function,” notes etc. Added “7.4 Position Output Operation Features” added
2016.08	7th Edition “Chapter 7 Appendix” “7.3 Track Concentrated Override Feature” deleted “7.4 Position Output Operation Features” deleted Correction made to other
2016.10	8th Edition Descriptions added in relation to AC servo motor type Corrections made to other descriptions
2017.01	8B Edition P42 Note added servomotor wattage P58 Contents added for servo motor in Current Consunption and Rush Current Contents added for Motor Drive Power Supply Line etc. P64 Correction made from 5.6Ω to 5.6kΩ in input part circuit resistance P66, 67, 99,100, 125 Assignment of Switches from Switch No. 1 (Addinional Switch) to Switch No. 4 (Additional Switch) added. Caution added P82 to 84, P89 to 91 Notes added for valtage, rated current and peak Max. DC current output of Motor Drive Power Supply Line(between MPI and MPO) P92 to 98 3.2.3 Safety Circuit Timing Charts for TTA (Pulse Motor, Servo Motor) added P253 Note added stating supply inlet ϕ8.0 and nipple hole diameter ϕ3.5

Revision Date	Revision Description
2017.02	8C Edition P10 Change made to note for safety protection fence setting to installation mandatory in order to satisfy Machinery Directive (2006/42/EC) in EU Directive and recommended for others
2017.03	9th Edition P79 “2.4 Procedures to Detach Operation Part” added P164 “5.2 All Axes Common Parameters No. 42” added P170 “5.3 Axis-Specific Parameters No. 132” added P185 “5.7 Other Parameters No. 27” added P255 “Chapter 8 Maintenance and Inspection” corrected and added “Procedures to Supply Grease”, “Procedures to Replace Belt” added
2017.05	10th Edition P52 Correction made in statement for dynamic allowable moment of X-axis for Workpiece-fixed Servomotor Type
2017.10	11th Edition P25 Correction made number of pins of “13) Standard I/O Service Power Supply Connector” P33 Correction made to accessories of “1.1.1 Parts” P83 to 84 “3.2.1 Pulse Motor Type” “[1] Internal Circuit Composition” [Global Specification] added P128 to 129 “4.3.2 Starting a Program by Specifying its Program Number” description sentence, Setting item and Caution added P136 “4.6.2 7-Segment Display by User SEL Program” description sentence added P142 to 150 “4.8 Payload Adjusted for Setting Values” added P157 “I/O Parameters number 79”, “AC Servo Motor Type” remarks added P159 “I/O Parameters number 116”, “Default value (Reference)” changed P160 “I/O Parameters number 124” parts of remarks deleted P161 “I/O Parameters number 144 to 148” parts of remarks added P162 “I/O Parameters number 170, 171” parameter name changed P168 “I/O Parameters number 347” parameter added P170 “I/O Parameters number 609” parts of remarks deleted P173 “All Axes Common Parameters number 19” system reservation added P209 “Error number 6BD” description, action, etc. changed P216 “Error number B04” description, action, etc. changed P217 “Error number B1A” added P224 “Error number C70” added

Manual No.: ME0320-11A (October 2017)

IAI
Quality and Innovation

IAI Corporation

Head Office: 577-1 Obane Shimizu-KU Shizuoka City Shizuoka 424-0103, Japan
TEL +81-54-364-5105 FAX +81-54-364-2589
website: www.iai-robot.co.jp/

Technical Support available in USA, Europe and China

IAI America, Inc.

Head Office: 2690 W. 237th Street, Torrance, CA 90505
TEL (310) 891-6015 FAX (310) 891-0815
Chicago Office: 110 East State Parkway, Schaumburg, IL 60173
TEL (847) 908-1400 FAX (847) 908-1399
Atlanta Office: 1220 Kennestone Circle, Suite 108, Marietta, GA 30066
TEL (678) 354-9470 FAX (678) 354-9471
website: www.intelligentactuator.com

IAI Industrieroboter GmbH

Ober der Röth 4, D-65824 Schwalbach am Taunus, Germany
TEL 06196-88950 FAX 06196-889524

IAI (Shanghai) Co., Ltd.

SHANGHAI JIAHUA BUSINESS CENTER A8-303, 808, Hongqiao Rd. Shanghai 200030, China
TEL 021-6448-4753 FAX 021-6448-3992
website: www.iai-robot.com

IAI Robot (Thailand) Co., Ltd.

825, PhairojKijja Tower 12th Floor, Bangna-Trad RD., Bangna, Bangna, Bangkok 10260, Thailand
TEL +66-2-361-4458 FAX +66-2-361-4456

The information contained in this document is subject to change without notice for purposes of product improvement.
Copyright © 2017. Oct. IAI Corporation. All rights reserved.

17.10.000